STATE OF OHIO
DEPARTMENT OF TRANSPORTATION
SUM–W. STEELS CORNERS RD. RESURFACING

CITY OF CUYAHOGA FALLS
SUMMIT COUNTY

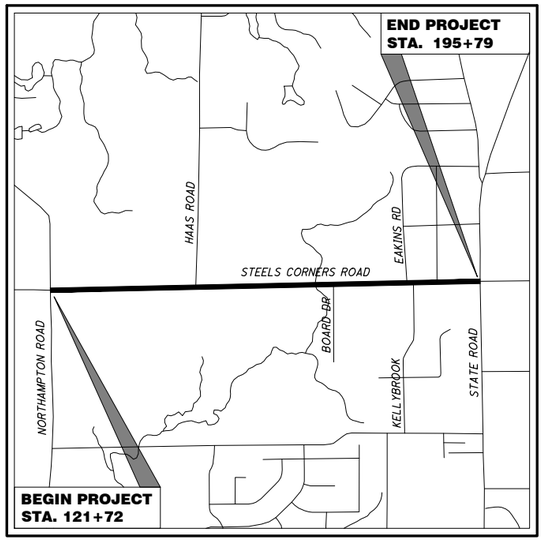

LOCATION MAP

LATITUDE: N 41°10'51" LONGITUDE: W 81°31'22"

SCALE IN MILES

0 1 2 3 4

N

PORTION TO BE IMPROVED
INTERSTATE HIGHWAY
FEDERAL ROUTES
STATE ROUTES
COUNTY & TOWNSHIP ROADS
OTHER ROADS

DESIGN DESIGNATION

	WEST STEELS CORNERS ROAD
CURRENT ADT (2018)	6,180
DESIGN YEAR ADT (2028)	N/A
DESIGN SPEED	45 MPH
LEGAL SPEED	45 MPH
DESIGN FUNCTIONAL CLASSIFICATION: COLLECTOR STREET	
NHS PROJECT	NO

DESIGN EXCEPTIONS

NONE

PROJECT DESCRIPTION

REHABILITATION OF 1.40 MILES OF WEST STEELS CORNER ROAD INCLUDING PLANING THE EXISTING PAVEMENT SURFACE, PERFORMING PAVEMENT REPAIRS AS REQUIRED BASED ON CONDITION AND BUDGET, REPLACING EXISTING GUARDRAIL, RESURFACING THE ROADWAY, AND REPLACEMENT OF PAVEMENT MARKINGS.

PROJECT EARTH DISTURBED AREA: N/A (MAINTENANCE PROJECT)
ESTIMATED CONTRACTOR EARTH DISTURBED AREA: N/A
NOTICE OF INTENT EARTH DISTURBED AREA: N/A (NOI NOT REQUIRED)

INDEX OF SHEETS:

TITLE SHEET	1
SCHEMATIC PLAN	2
TYPICAL SECTIONS	3
GENERAL NOTES	4-7
GENERAL SUMMARY AND SUBSUMMARIES	8-10
CALCULATIONS	11
PLANS	12-15

2019 SPECIFICATIONS

THE STANDARD SPECIFICATIONS OF THE STATE OF OHIO, DEPARTMENT OF TRANSPORTATION, INCLUDING CHANGES AND SUPPLEMENTAL SPECIFICATIONS LISTED IN THE PROPOSAL SHALL GOVERN THIS IMPROVEMENT.

I HEREBY APPROVE THESE PLANS AND DECLARE THAT THE MAKING OF THIS IMPROVEMENT WILL NOT REQUIRE THE CLOSING TO TRAFFIC OF THE HIGHWAY AND THAT PROVISIONS FOR THE MAINTENANCE AND SAFETY OF TRAFFIC WILL BE AS SET FORTH ON THE PLANS AND ESTIMATES.

UNDERGROUND UTILITIES

CONTACT BOTH SERVICES TWO WORKING DAYS BEFORE YOU DIG.

OHIO Utilities Protection SERVICE — Call Before You Dig 1-800-362-2764

(Non-members must be called directly)

OIL & GAS PRODUCERS UNDERGROUND PROTECTION SERVICE 1-800-925-0988

PLAN PREPARED BY:

AECOM

AKRON CINCINNATI CLEVELAND COLUMBUS
564 WHITE POND DRIVE AKRON, OHIO 44320-1100
(330) 836-9111

ENGINEERS SEAL:

STATE OF OHIO — MICHAEL ALAN WOODRING E-67521 — REGISTERED PROFESSIONAL ENGINEER

SIGNED: Michael A. Woodring
DATE: 7/1/2020

STANDARD CONSTRUCTION DRAWINGS						SUPPLEMENTAL SPECIFICATIONS	SPECIAL PROVISIONS
BP-2.1 7/17/15	MGS-1.1 1/19/18					800 4/17/20	
BP-3.1 1/17/20	MGS-2.1 1/19/18						
BP-3.2 1/18/19							
BP-4.1 7/19/13	MT-97.10 4/19/19						
BP-5.1 1/18/19	MT-99.20 4/19/19						
BP-7.1 7/17/20							
	TC-71.10 1/19/18						

APPROVED BY THE CITY OF CUYAHOGA FALLS

APPROVED Tony V. Demasi
DATE 6/24/20 CITY ENGINEER, TONY DEMASI

APPROVED Anthony S. Zumbo
DATE 6/24/20 SERVICE DIRECTOR, ANTHONY ZUMBO

FEDERAL PROJECT NO. NON FEDERAL

PID NO. 102904

CONSTRUCTION PROJECT NO

RAILROAD INVOLVEMENT NONE

SUM–W. STEELS CORNERS RD. RESURFACING (PID 102904)

G:\Akron\DCS\Projects\TRN\60584787_WSteelRes\900_CAD_GIS\910_CAD\05-MODELS\102904\Design\Roadway\Sheets\102904_GT001.dwg 25-Jun-20 2:31 PM

Z:\Akron-USAKR3\DCS\Projects\TRN\60584787_WSteelRes\900_CAD_GIS\910_CAD\05-MODELS\102904\Design\Roadway\Sheets\102904_GB001.dwg 30-Jun-20 10:34 AM

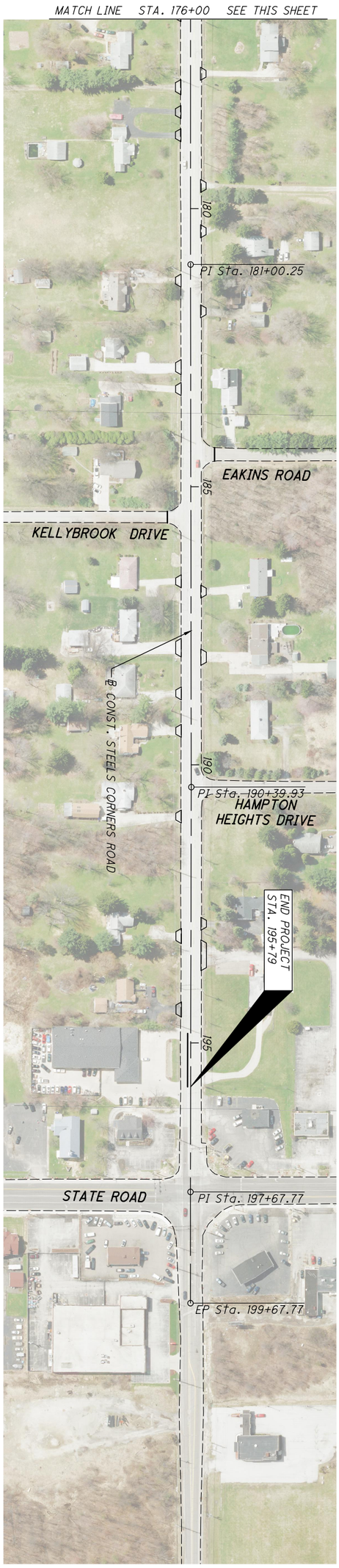

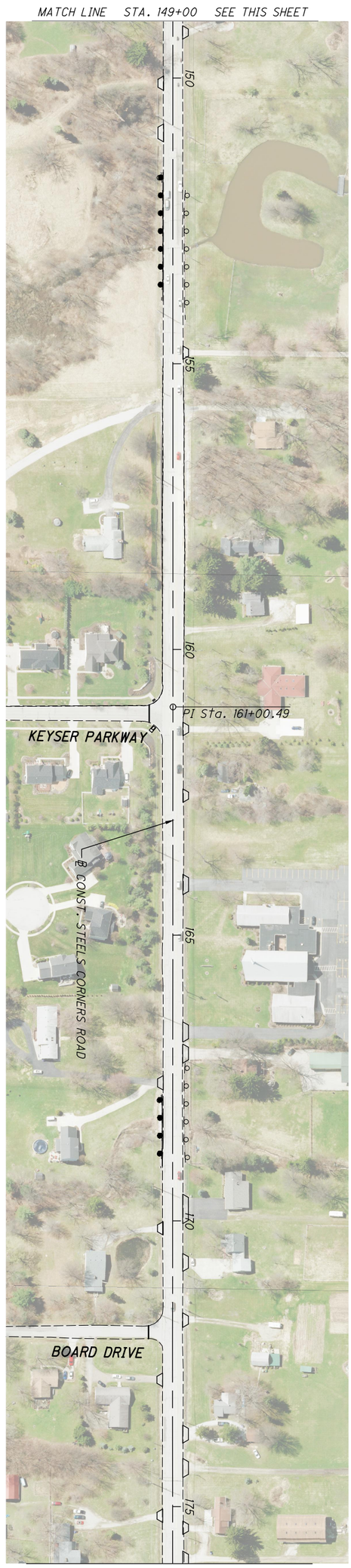

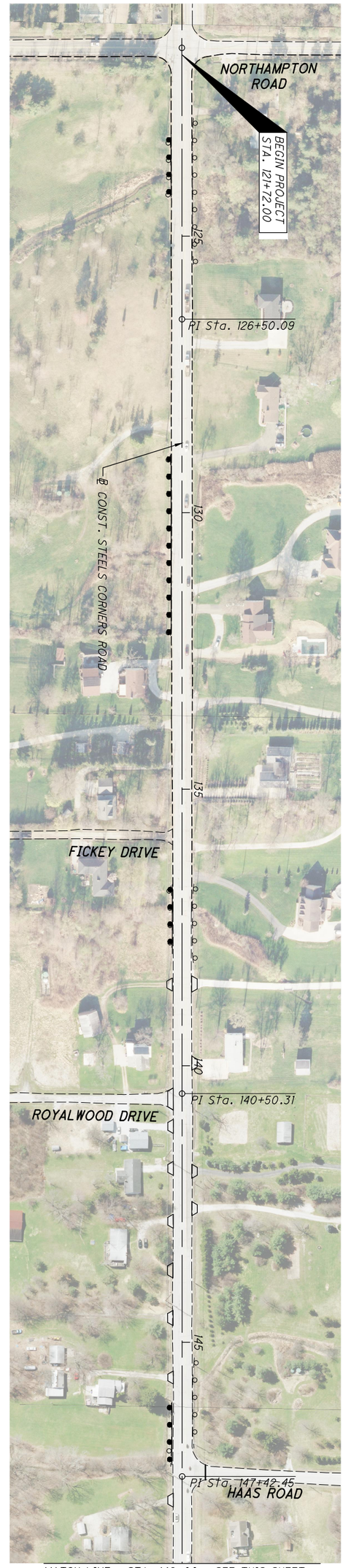

2 / 15	SUM-W. STEELS CORNERS RD. RESURFACING (PID 102904)	SCHEMATIC PLAN	CALCULATED DRG / CHECKED AMP	0 50 100 200 HORIZONTAL SCALE IN FEET

EXISTING LEGEND

- (A) EXISTING ASPHALT CONCRETE SURFACE COURSE (T=1-1/2")
- (B) EXISTING ASPHALT CONCRETE INTERMEDIATE COURSE (T=1-1/2")
- (C) EXISTING BITUMINOUS AGGREGATE BASE (T=6")
- (D) EXISTING AGGREGATE BASE (T=6")
- (E) EXISTING CURB

PROPOSED LEGEND

- (1) ITEM 254, PAVEMENT PLANING, ASPHALT CONCRETE (T=3")
- (2) ITEM 407, NON-TRACKING TACK COAT
- (3) ITEM 441, ASPHALT CONCRETE INTERMEDIATE COURSE, TYPE 2, (446) [T=1-3/4"]
- (4) ITEM 441, ASPHALT CONCRETE SURFACE COURSE, TYPE 1, (446), PG70-22M [T=1-1/4"]
- (5) ITEM 606, GUARDRAIL, TYPE MGS, AS PER PLAN

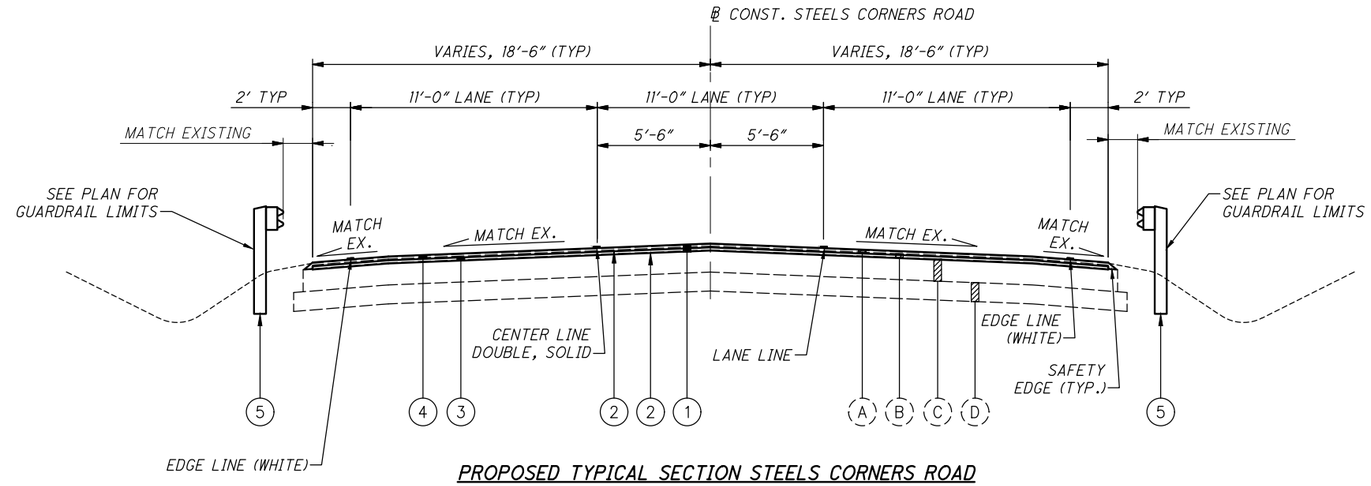

PROPOSED TYPICAL SECTION STEELS CORNERS ROAD

STA. 136+75.00 TO STA. 155+05.00 = 1,830'
STA. 160+05.00 TO STA. 195+79.00 = 3,574'
TOTAL = 5,404'

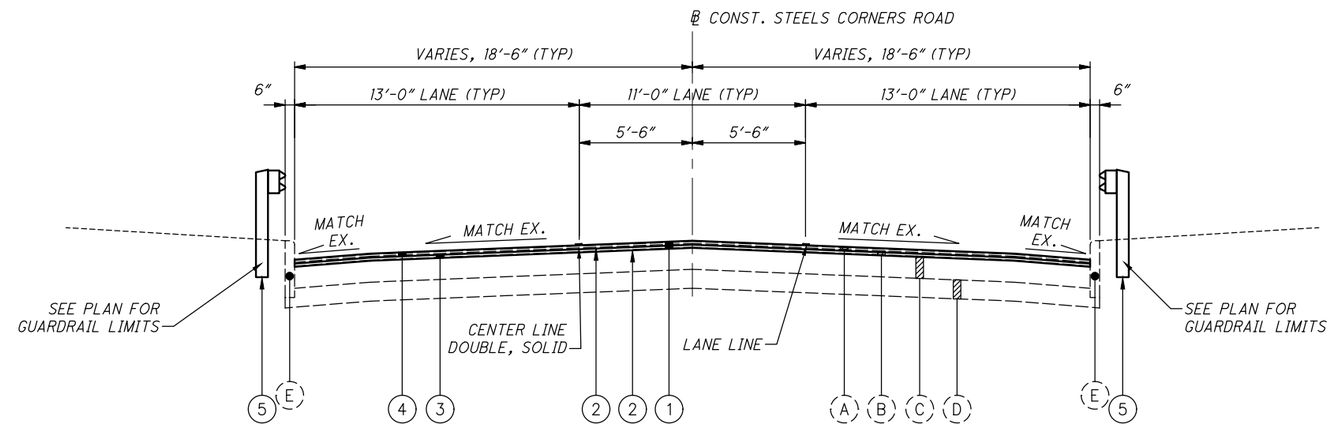

PROPOSED TYPICAL SECTION STEELS CORNERS ROAD

STA. 121+72.00 TO STA. 136+75.00 = 1,503'
STA. 155+05.00 TO STA. 160+05.00 = 500'
TOTAL = 2,003'

CALCULATED DRG
CHECKED AMP

TYPICAL SECTIONS

SUM-W. STEELS CORNERS RD.
RESURFACING (PID 102904)

Z:\Akron-USAKR3\DCS\Projects\TRN\60584787_WSteelRes\900_CAD_GIS\910_CAD\05-MODELS\102904\Design\Roadway\Sheets\102904_GY001.dwg 30-Jun-20 10:35 AM

GENERAL

WORK LIMITS

THE WORK LIMITS SHOWN ON THESE PLANS ARE FOR PHYSICAL CONSTRUCTION ONLY. PROVIDE THE INSTALLATION AND OPERATION OF ALL WORK ZONE TRAFFIC CONTROL AND WORK ZONE TRAFFIC CONTROL DEVICES REQUIRED BY THESE PLANS WHETHER INSIDE OR OUTSIDE THESE WORK LIMITS.

PROFILE AND ALIGNMENT

PLACE THE PROPOSED PAVEMENT TO FOLLOW THE ALIGNMENT AND PROFILE OF THE EXISTING PAVEMENT. PLACE THE PROPOSED ASPHALT OVERLAY AND LEVELING WITH A UNIFORM THICKNESS AS SHOWN ON THE TYPICAL SECTIONS.

PAVEMENT MARKING LANE WIDTHS

THE NORMAL LANE WIDTHS FOR THE PAVEMENT MARKINGS ON THIS PROJECT SHALL BE AS SHOWN ON THE TYPICAL SECTION ON SHEET 3 .

UTILITIES

THE CONTRACTOR SHALL USE THE FOLLOWING PROCEDURE AT EACH LOCATION WHERE WORK IS PERFORMED, IN ACCORDANCE WITH SECTIONS 105.07 AND 107.16 IN THE CONSTRUCTION AND MATERIALS SPECIFICATIONS.

THE CONTRACTOR SHALL NOTIFY THE PROJECT ENGINEER, THE OHIO UTILITIES PROTECTION SERVICE (OUPS), THE OHIO & GAS PROCEDURES UNDERGROUND PROTECTION SERVICE (OGPUPS), THE OHIO DEPARTMENT OF TRANSPORTATION DISTRICT 4 HEADQUARTERS AND ALL NON REGISTERED UTILITY OWNERS AT LEAST TWO (2) WORKING DAYS PRIOR TO COMMENCING CONSTRUCTION IN ALL AREAS.

OUPS 1-800-362-2764 (CONTACT LIMITED BASIS PARTICIPANTS DIRECTLY)
OGPUPS 1-800-925-0988
ODOT 330-786-3145 (KEN GREENE)

LISTED BELOW ARE ALL UTILITIES LOCATED WITHIN THE PROJECT CONSTRUCTION LIMITS TOGETHER WITH THEIR RESPECTIVE OWNERS:

ELECTRIC
CUYAHOGA FALLS ELECTRIC
DEPARTMENT
ATTN: JASON MALYSA
2550 BAILEY ROAD
CUYAHOGA FALLS, OHIO
44221
(330) 971-8047

OHIO EDISON
ATTN: MICHAEL JANSON
2600 ERIE STREET SOUTH
MASSILLON, OH 44646

GAS
DOMINION EAST OHIO
ATTN: JASON HARRIS
320 SPRINGSIDE DRIVE,
SUITE 320
AKRON, OHIO 44333
(330)266-2150

THE LOCATION OF EXISTING UNDERGROUND UTILITIES ARE NOT SHOWN ON THE PLANS, BUT CAN BE OBTAINED FROM THE OWNERS OF THE UTILITIES. THE CONTRACTOR IS RESPONSIBLE FOR ANY DAMAGE TO UTILITIES.

CONSTRUCTION NOISE

ACTIVITIES AND LAND USE ADJACENT TO THIS PROJECT MAY BE AFFECTED BY CONSTRUCTION NOISE. IN ORDER TO MINIMIZE ANY ADVERSE CONSTRUCTION NOISE IMPACTS, DO NOT OPERATE POWER-OPERATED CONSTRUCTION-TYPE DEVICES BETWEEN THE HOURS OF 8:00PM AND 7:00AM UNLESS SPECIFIC WRITTEN APPROVAL HAS BEEN GRANTED BY THE CITY OF CUYAHOGA FALLS. IN ADDITION, DO NOT OPERATE AT ANY TIME ANY TYPE OF DEVICE IN SUCH A MANNER THAT THE NOISE CREATED SUBSTANTIALLY EXCEEDS THE NOISE CUSTOMARILY AND NECESSARILY ATTENDANT TO THE REASONABLE AND EFFICIENT PERFORMANCE OF SUCH EQUIPMENT.

PROTECTION OF EXISTING MAILBOXES

CONTRACTOR SHALL USE EXTREME CARE WHEN PERFORMING WORK NEAR EXISTING MAILBOXES. CONTRACTOR MUST MAKE EVERY EFFORT AND TAKE EVERY PRECAUTION NOT TO DAMAGE ANY EXISTING MAILBOXES. MAILBOXES DAMAGED BY THE NEGLIGENCE OF THE CONTRACTOR, AS DETERMINED BY THE ENGINEER, SHALL BE REPLACED AT THE EXPENSE OF THE CONTRACTOR. REPLACEMENT MAILBOXES AND ANCILLARY EQUIPMENT MUST BE SATISFACTORY TO THE PROPERTY OWNER AND BE APPROVED BY THE ENGINEER.

PROGRESSION OF WORK

PRIOR TO PAVEMENT PLANING, THE CONTRACTOR SHALL WALK THE SITE AND MARK USING LATHE THE CRITICAL LOCATIONS OF EXISTING PAVEMENT MARKINGS TO AID THE PROPOSED PAVEMENT MARKING DETAILS, SEE SHEETS 12-15 . IMMEDIATELY FOLLOWING PAVEMENT PLANING, AREAS OF ITEM 251 PARTIAL DEPTH PAVEMENT REPAIR AND ITEM 253 PAVEMENT REPAIR SHALL BE MARKED BY THE ENGINEER CONFORMING TO CMS 251.02 AND 253.02, RESPECTIVELY. PARTIAL DEPTH PAVEMENT REPAIR AND PAVEMENT REPAIR SHALL THEN COMMENCE AS PER THE CMS AND THE ABOVE NOTES. RESURFACING, AS SHOWN ON THE TYPICAL SECTIONS, SEE SHEET 3 , SHALL COMMENCE UPON COMPLETION OF ITEMS 251 AND 253. UPON COMPLETION OF RESURFACING, PAVEMENT MARKINGS SHALL BE PLACED AS DETAILED ON THE PROPOSED PAVEMENT MARKINGS DETAILS. AREAS OF SOLID AND DASHED CENTERLINE SHOULD BE NOTED TO ENSURE EXISTING PASSING ZONES ARE MAINTAINED FOLLOWING THE COMPLETION OF THIS PROJECT.

DRAINAGE

ITEM SPECIAL - MISCELLANEOUS METAL

EXISTING CASTINGS MAY PROVE TO BE UNSUITABLE FOR REUSE, AS DETERMINED BY THE CITY ENGINEER. IT SHALL BE THE CONTRACTOR'S RESPONSIBILITY TO PROVIDE THE CASTINGS OF THE REQUIRED TYPE, SIZE AND STRENGTH (HEAVY OR LIGHT DUTY) FOR THE PARTICULAR STRUCTURE IN QUESTION. ALL MATERIAL SHALL MEET ITEM 611 OF THE SPECIFICATIONS AND SHALL HAVE THE PRIOR APPROVAL OF THE ENGINEER.

THE FOLLOWING ESTIMATED QUANTITY HAS BEEN CARRIED TO THE GENERAL SUMMARY FOR USE AS DIRECTED BY THE ENGINEER.

SPECIAL, MISCELLANEOUS METAL 1000 POUND

THE CONTRACTOR IS CAUTIONED TO USE EXTREME CARE IN THE REMOVAL, STORAGE AND REPLACEMENT OF ALL EXISTING CASTINGS. CASTINGS DAMAGED BY THE NEGLIGENCE OF THE CONTRACTOR, AS DETERMINED BY THE ENGINEER, SHALL BE REPLACED WITH THE PROPER NEW CASTINGS AT THE EXPENSE OF THE CONTRACTOR.

PAVEMENT

ITEM 251 - PARTIAL DEPTH PAVEMENT REPAIR (441)

A QUANTITY OF THIS ITEM SHALL BE PROVIDED FOR USE AS DIRECTED BY THE ENGINEER. THE ITEM SHALL CONSIST OF REPAIRING EXISTING LOCATIONS EXHIBITING SURFACE DETERIORATION AND PLACING ITEM 441 ASPHALT CONCRETE, TYPE 2. THE ASPHALT CONCRETE SHALL BE COMPACTED WITH A TYPE I PNEUMATIC TIRE ROLLER AND A STEEL WHEEL ROLLER AS PER 401.13. IT IS NOT THE INTENT TO REPAIR EVERY DETERIORATED AREA WITHIN THE PROJECT. THE ENGINEER SHALL DETERMINE WHICH AREAS ARE TO BE REPAIRED. UNLESS OTHERWISE DIRECTED BY THE ENGINEER, THIS ITEM SHALL BE PERFORMED AFTER THE COMPLETION OF MAINLINE PAVEMENT PLANING. ALSO, THIS ITEM SHALL COMMENCE WITHIN 7 DAYS OF THE COMPLETION OF MAINLINE PAVEMENT PLANING. PAYMENT SHALL BE BASED ON THE ACTUAL NUMBER OF SQUARE YARDS OF PAVEMENT REPAIR. THE FOLLOWING ESTIMATED QUANTITY HAS BEEN CARRIED TO THE GENERAL SUMMARY:

251, PARTIAL DEPTH PAVEMENT REPAIR (441) 3103 SQ. YD.

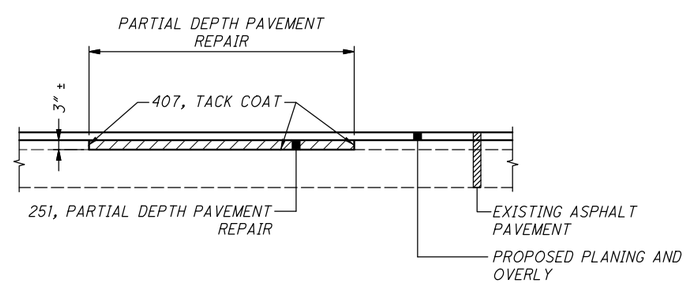

ITEM 253 - PAVEMENT REPAIR

A QUANTITY OF THIS ITEM SHALL BE PROVIDED FOR USE AS DIRECTED BY THE ENGINEER. THIS ITEM SHALL CONSIST OF CUTTING AND REMOVING DETERIORATED PAVEMENT FULL DEPTH AND PLACING 12"± 301 ASPHALT CONCRETE BASE, PG64-22. THE MAXIMUM COMPACTED DEPTH OF ANY ONE LAYER SHALL BE 6 INCHES. UNLESS OTHERWISE DIRECTED BY THE ENGINEER, THIS ITEM SHALL BE PERFORMED AFTER THE COMPLETION OF MAINLINE PAVEMENT PLANING. ALSO, THIS ITEM SHALL COMMENCE WITHIN 7 DAYS OF THE COMPLETION OF MAINLINE PAVEMENT PLANING. IT IS NOT THE INTENT TO REPAIR EVERY DETERIORATED AREA WITHIN THE PROJECT. THE ENGINEER SHALL DETERMINE WHICH AREAS ARE TO BE REPAIRED. PAYMENT SHALL BE BASED ON THE ACTUAL NUMBER OF SQUARE YARDS OF PAVEMENT REMOVED AND REPLACED TO THE LIMITS DESIGNATED BY THE ENGINEER. THE FOLLOWING ESTIMATED QUANTITY HAS BEEN CARRIED TO THE GENERAL SUMMARY:

253, PAVEMENT REPAIR 1552 SQ YD

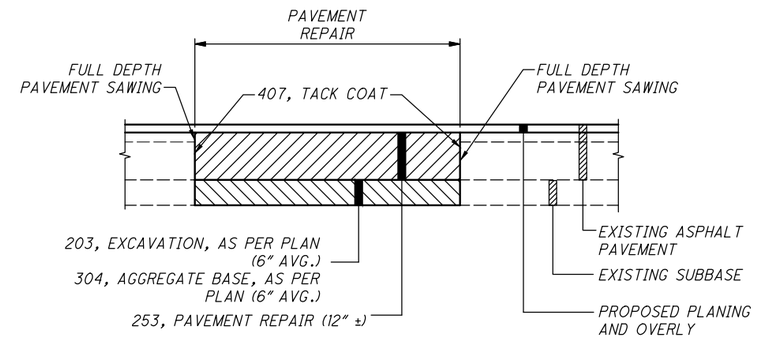

ITEM 203 - EXCAVATION, AS PER PLAN

THIS ITEM OF WORK SHALL CONSIST OF REMOVING AND DISPOSING OF ALL UNSUITABLE MATERIAL BY EXCAVATING THE EXISTING SUBGRADE AND SUBBASE TO AN AVERAGE DEPTH OF 6 INCHES OR AS DIRECTED BY THE ENGINEER. EXACT LIMITS OF REMOVAL SHALL BE DETERMINED BY THE ENGINEER. ALL EQUIPMENT, LABOR, TOOLS, AND INCIDENTALS NECESSARY TO COMPLETE THIS ITEM SHALL BE INCLUDED IN THE UNIT PRICE BID FOR ITEM 203 EXCAVATION, AS PER PLAN. THE FOLLOWING ESTIMATED QUANTITY HAS BEEN CARRIED TO THE GENERAL SUMMARY:

203, EXCAVATION, AS PER PLAN 30 CU YD

ITEM 304 - AGGREGATE BASE, AS PER PLAN

THE FOLLOWING ESTIMATED QUANTITY HAS BEEN PROVIDED AND SHALL BE USED AS DIRECTED BY THE ENGINEER TO BACKFILL AREAS WHICH WERE EXCAVATED UNDER ITEM 203 EXCAVATION, AS PER PLAN. THE FOLLOWING ESTIMATED QUANTITY HAS BEEN CARRIED TO THE GENERAL SUMMARY:

304, AGGREGATE BASE, AS PER PLAN 30 CU YD

Z:\Akron-USAKR3\DCS\Projects\TRN\60584787_WSteelRes\900_CAD_GIS\910_CAD\05-MODELS\102904\Design\Roadway\Sheets\102904_GN001.dwg 30-Jun-20 10:37 AM

INTERSECTIONS

INTERSECTIONS SHALL BE RESURFACED 25 FEET BEYOND THE EDGE LINE, UNLESS OTHERWISE DIRECTED BY THE ENGINEER OR INDICATED IN THE PLAN. INTERSECTIONS SHALL BE PAVED AFTER COMPLETION OF THE SURFACE COURSE. A BUTT JOINT, AS PER STANDARD CONSTRUCTION DRAWING BP-3.1, SHALL BE USED TO PROVIDE A SMOOTH TRANSITION TO THE EXISTING PAVEMENT. INTERSECTIONS SHALL BE RESURFACED WITH STANDARD MIX, AS SHOWN ON THE TYPICAL SECTIONS. ANY GRADING OR TACK COAT NECESSARY TO ACCOMPLISH THIS WORK SHALL BE INCLUDED IN THE COST OF THE PERTINENT BID ITEM.

ITEM 617 - COMPACTED AGGREGATE, AS PER PLAN

IN LOW SHOULDER AREAS EXCEEDING 1", OR AS DIRECTED BY THE ENGINEER, RECYCLE ASPHALT PAVEMENT (RAP) SHALL BE USED IN AREAS ADJACENT TO THE PAVED BERM. THE RAP SHALL HAVE A MINIMUM PG CONTENT OF 4.5% AND MEET THE FOLLOWING GRADATION. ONCE THE STOCKPILE MEETS GRADATION, THE PG CONTENT OF THE RAP SHALL BE DETERMINED PER 441.03. THE RAP ANALYSIS MUST BE SUBMITTED TO THE ENGINEER FOR APPROVAL TWO (2) WEEKS PRIOR TO USE. METHOD OF MEASUREMENT SHALL BE AS PER 617.06. PLACEMENT AND COMPACTION SHALL MEET THE REQUIREMENTS OF ITEM 617. ALL MATERIALS, LABOR, EQUIPMENT, TOOLS AND INCIDENTALS NECESSARY TO COMPLETE THE WORK SHALL BE INCLUDED IN THE UNIT PRICE BID FOR ITEM 617 - COMPACTED AGGREGATE, AS PER PLAN.

MODIFIED GRADATION SHALL APPLY:

SIEVE	TOTAL PERCENT PASSING
1½"	100
¾"	50 - 100
NO. 4	35 - 50
NO. 30	9 - 33
NO. 200	0 - 13

THE FOLLOWING ESTIMATED QUANTITY HAS BEEN CARRIED TO THE GENERAL SUMMARY:

617, COMPACTED AGGREGATE, AS PER PLAN 100 CU YD

ITEM 441 ASPHALT CONCRETE SURFACE COURSE TYPE 1, (448), (DRIVEWAYS)

THIS ITEM OF WORK SHALL CONSIST OF PAVING ALL EXISTING DRIVEWAYS THAT DO NOT HAVE A CURB CUT OR ARE NOT PAVED AS AN INTERSECTION AS SHOWN ON THE ASPHALT CONCRETE PLAN SHEET. DRIVEWAYS ARE TO BE PAVED A DISTANCE OF 10 FT. FROM THE EDGE OF PAVED SHOULDER UNLESS OTHERWISE DIRECTED BY THE ENGINEER. DRIVEWAYS SHALL BE PAVED AFTER COMPLETION OF THE SURFACE COURSE. ASPHALT CONCRETE AVERAGE THICKNESSES SHALL BE 2 IN. FOR AGGREGATE DRIVEWAYS (UNIMPROVED) AND 1 IN. FOR IMPROVED DRIVEWAYS. AGGREGATE DRIVEWAYS SHALL BE GRADED PRIOR TO PAVING SUCH THAT SURFACE DRAINAGE DOES NOT ENCROACH UPON THE PAVED SHOULDER AND SHALL BE GRADED TO ACHIEVE THE THICKNESS OF THE SURFACE COURSE. THE MAXIMUM PAVED WIDTH SHALL NOT EXCEED THAT ALLOWED FOR THROAT AND RADIUS FOR UNCURBED DRIVEWAYS AS PER STANDARD DRIVE DESIGN MANUAL. ALL GRADING, TOOLS, EQUIPMENT, MATERIAL AND INCIDENTALS REQUIRED TO LAYOUT AND CONSTRUCT THE DRIVEWAYS SHALL BE INCLUDED IN THE UNIT PRICE BID FOR ITEM 441 ASPHALT CONCRETE SURFACE COURSE, TYPE 1, (448) (DRIVEWAYS)

ITEM 606 GUARDRAIL, TYPE MGS, AS PER PLAN

GUARDRAIL, TYPE MGS, SHALL BE CONSTRUCTED AS PER THE STANDARD DRAWINGS AND CMS 606. IN ADDITION TO THESE REQUIREMENTS THE CONTRACTOR SHALL VERIFY THE EXISTING SLOPES PRIOR TO CONSTRUCTING THE GUARDRAIL. IF THE EXISTING SLOPES ARE STEPPER THAN WHAT IS REQUIRED IN THE STANDARD DRAWINGS AND CMS 606, THE CONTRACTOR SHALL PERFORM ITEM 209 - RESHAPING UNDER GUARDRAIL TO RESHAPE THE GRADED SHOULDER OR PROVIDE ITEM 606 - GUARDRAIL, TYPE MGS WITH LONG POSTS. THE COST TO PROVIDE AND INSTALL ITEM 606 - GUARDRAIL, TYPE MGS WITH LONG POSTS SHALL BE INCLUDED IN THE UNIT PRICE BID FOR ITEM 606 - GUARDRAIL, TYPE MGS, AS PER PLAN

ITEM 209 - RESHAPING UNDER GUARDRAIL

TREATED SHOULDER WIDTH BEYOND THE LIMITS OF THE COMPACTED AGGREGATE SHALL BE GRADED TO PROVIDE POSITIVE DRAINAGE INTO THE DITCH AND SHALL BE PERFORMED ONLY IN THE AREAS NECESSARY. RESHAPING SHALL BE ACCOMPLISHED BY THE REMOVAL OF, OR ADDITION OF MATERIAL TO PROVIDE A 0.08 SLOPE TO THE DITCH BREAK POINT. EXCESS MATERIAL SHALL BE WINDROWED ON THE SHOULDER. THE RESHAPED AREAS SHALL BE COMPACTED TO A SUFFICIENT DENSITY TO PREVENT EROSION UNTIL SEEDING AND MULCHING AS PER 659 IS PERFORMED. ALL EXCESS MATERIAL SHALL BE REMOVED FROM THE BERMS AND NOT ALLOWED TO ENTER THE DITCH LINE AND SHALL BE DISPOSED OF OFF THE PROJECT BY THE CONTRACTOR.
THE METHOD OF MEASUREMENT OF ITEM 209 RESHAPING UNDER GUARDRAIL SHALL BE STATIONS, WITH ONE STATION EQUAL TO 100 LINEAR FEET. THE DISTANCE SHALL BE MEASURED ALONG EACH EDGE OF PAVEMENT. ALL MATERIALS, LABOR, EQUIPMENT, TOOLS AND INCIDENTALS NECESSARY TO COMPLETE THE WORK SHALL BE INCLUDED IN THE UNIT BID PRICE FOR ITEM 209 RESHAPING UNDER GUARDRAIL. IN AREAS WHERE GRADING IS NOT REQUIRED BEYOND THE 617 LIMIT, RESHAPING UNDER GUARDRAIL WILL BE NON-PERFORMED AS DIRECTED BY THE ENGINEER. THE FOLLOWING QUANTITY HAS BEEN CARRIED TO THE GENERAL SUMMARY:

209, RESHAPING UNDER GUARDRAIL, 2 STA

SAFETY EDGE (ASPHALT CONCRETE)

IN ADDITION TO THE REQUIREMENTS OF 401.12, ATTACH A DEVICE TO THE SCREED OF THE PAVER THAT CONFINES THE MATERIAL AT THE END GATE AND EXTRUDES THE ASPHALT MATERIAL IN SUCH A WAY THAT RESULTS IN A COMPACTED WEDGE SHAPE PAVEMENT EDGE OF APPROXIMATELY 30 DEGREES (NOT STEEPER THAN 40 DEGREES). ENSURE THE DEVICE MAINTAINS CONTACT WITH THE EXISTING SURFACE, AND ALLOW FOR AUTOMATIC TRANSITION TO CROSS ROADS, DRIVEWAYS AND OBSTRUCTIONS. DO NOT USE CONVENTIONAL SINGLE PLATE STRIKE OFF.

CONSTRUCTION OF SAFETY EDGE CAN BE OMITTED AT LOCATIONS WHERE EXISTING WIDTH OF GRADED SHOULDER OR BERM IS LESS THAN 12". PROJECTS WITH VARYING CONDITIONS SHOULD USE SAFETY EDGE WHERE POSSIBLE. PLAN PREPARATION HAS MADE EVERY REASONABLE ATTEMPT TO IDENTIFY SAFETY EDGE LOCATIONS.

USE THE TRANSTECH SHOULDER WEDGE MAKER, THE CARLSON SAFETY EDGE END GATE, THE ADVANT-EDGER, THE RAMP CHAMP SERIES II WITH SAFETY EDGE SHOE, THE TROXLER SAFETSLOPE OR A SIMILAR APPROVED-EQUAL DEVICE THAT PRODUCES THE SAME WEDGE CONSOLIDATION RESULTS. CONTACT INFORMATION FOR THESE WEDGE SHAPE COMPACTION DEVICES IS THE FOLLOWING:

TRANSTECH SYSTEMS, INC.
1594 STATE STREET
SCHENECTADY, NY 12304
1-800-724-6306
WWW.TRANSTECHSYS.COM

CARLSON SAFETY EDGE END GATE
18425 50TH AVENUE EAST
TACOMA, WA 98446
253-875-8000

ADVANT-EDGE PAVING EQUIPMENT LLC
33 OLD NISKAYUNA RD.
LOUDONVILLE, NY 12211
814-422-EDGE
WWW.ADVANTAEDGEPAVING.COM

CARLSON SAFETY EDGE END GATE
18425 50TH AVENUE EAST
TACOMA, WA 98446
253-875-8000
WWW.CARLSPNPAVINGPRODUCTS.COM

TROXLER ELECTRONIC LABORATORIES, INC.
3008 E. CORNWALLIS RD.
PO BOX 12057
RESEARCH TRIANGLE PARK, NC 27709
1-877-TROXLER (876-9537)
WWW.TROXLERLABS.COM

IF ELECTING TO USE A SIMILAR DEVICE, PROVIDE PROOF THAT THE DEVICE HAS BEEN USED ON PREVIOUS PROJECTS WITH ACCEPTABLE RESULTS OR CONSTRUCT A TEST SECTION PRIOR TO THE BEGINNING OF WORK AND DEMONSTRATE WEDGE COMPACTION TO THE SATISFACTION OF THE ENGINEER. SHORT SECTIONS OF HANDWORK WILL BE ALLOWED WHEN NECESSARY FOR TRANSITIONS AND TURNOUTS OR OTHERWISE AUTHORIZED BY THE ENGINEER.

IN ADDITION TO THE REQUIREMENTS OF 401.16, MAKE THE FIRST ROLLER PASS 8 TO 12 INCHES (200 TO 300 mm) AWAY FROM TAPERED EDGE. DO NOT ROLL THE TAPER.

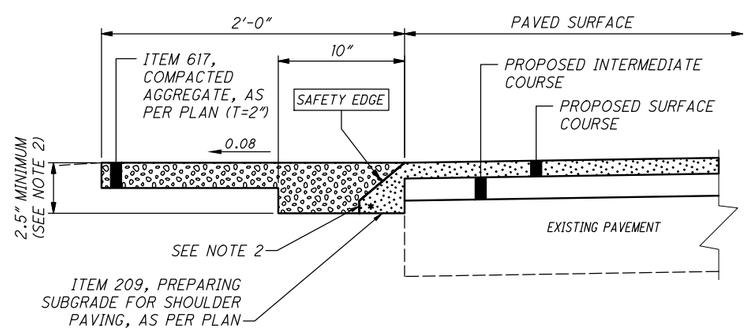

SAFETY EDGE DETAIL FOR 2 COURSE OVERLAY

NOTES:
1. SAFETY EDGES ARE REQUIRED AT THE OUTSIDE EDGES OF THE PAVED ROADWAY (EDGE OF TRAVEL LANE OR EDGE OF PAVED SHOULDER).

2. CONSTRUCT THE SAFETY EDGE THE FULL ASPHALT CONCRETE OVERLAY THICKNESS OR 2.5" WHICHEVER IS GREATER, NOT TO EXCEED THE MAXIMUM SAFETY EDGE THICKNESS OF 6". CONSTRUCT A NEAR-VERTICAL FACE BELOW THE SAFETY EDGE FOR THICKNESS GREATER THAN 6".

3. BLADE AND SHAPE EXISTING SHOULDER MATERIAL TO FORM A UNIFORM SURFACE UNDER THE SAFETY EDGE PRIOR TO PLACEMENT OF THE ASPHALT CONCRETE OVERLAY.

* 40° MAX

ITEM 209 - PREPARING SUBGRADE FOR SHOULDER PAVING, AS PER PLAN

PREPARE THE SHOULDER FOR PAVING A CONSISTENT SAFETY EDGE IN BOTH THICKNESS AND WIDTH.

PRIOR TO PAVING THE SAFETY EDGE, GRADE AN AREA 10 INCHES WIDE, BEGINNING AT THE EDGE OF THE PAVED ROADWAY, TO PROVIDE A LEVEL SURFACE FREE OF VEGETATION FOR CONSTRUCTION OF THE SAFETY EDGE. IF NECESSARY, EXCAVATE THE GRADED AREA TO THE DEPTH NECESSARY TO CONSTRUCT THE SAFETY EDGE. COMPACT THE GRADED SHOULDER ACCORDING TO 617.05, OR AS DIRECTED BY THE ENGINEER.

SAFETY EDGE THICKNESS (IN)	STATION		SIDE	209 PREPARING SUBGRADE FOR SHOULDER PAVING, AS PER PLAN
	TO	FROM		MILE
	STEELS CORNERS ROAD			
2.50				
2.50	136+70.00	155+00.00	LT/RT	0.35
2.50	160+00.00	195+79.00	LT/RT	0.68
TOTALS CARRIED TO GENERAL SUMMARY				1.03

ITEM 609 - CURB, MISC.: CURB, TYPE 6 REPAIR

CURB, MISC.: CURB, TYPE 6 REPAIR SHALL CONSIST OF REMOVING AND REPLACING EXISTING CURB THAT IS IN POOR CONDITION AS DIRECTED BY THE ENGINEER. ALL MATERIALS AND LABOR REQUIRED FOR THE COMPLETE INSTALLATION, INCLUDING SAWCUT, REMOVAL OF THE EXISTING CURB, EXCAVATION, PROPOSED CURB, AND UNDERDRAIN SHALL BE INCLUDED IN THE UNIT PRICE BID PER FOOT OF ITEM 609 - CURB, MISC.: CURB, TYPE 6 REPAIR.

THE FOLLOWING ESTIMATED QUANTITY HAS BEEN CARRIED TO THE GENERAL SUMMARY:

609, CURB, MISC.: CURB, TYPE 6 REPAIR 150 FT

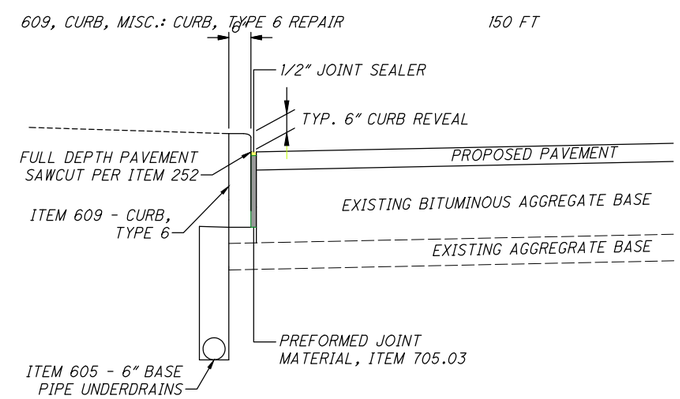

CONCRETE CURB REPAIR DETAIL

Z:\Akron-USAKR3\DCS\Projects\TRN\60584787_WSteelRes\900_CAD_GIS\910_CAD\05-MODELS\102904\Design\Roadway\Sheets\102904_GN001.dwg 30-Jun-20 10:37 AM

MAINTENANCE OF TRAFFIC

THIS ITEM SHALL CONSIST OF MAINTENANCE OF TRAFFIC ON EXISTING ROADWAYS IN ACCORDANCE WITH THE OHIO MANUAL OF UNIFORM TRAFFIC CONTROL DEVICES FOR STREETS AND HIGHWAYS, CURRENT EDITION, LATEST REVISION, THE SPECIFICATIONS AND THE FOLLOWING:

1. A MINIMUM OF ONE TEN (10) FOOT BIDIRECTIONAL LANE SHALL BE MAINTAINED USING FLAGGERS ON THE EXISTING PAVEMENT OR COMPLETED PAVEMENT DURING CONSTRUCTION OF THE WORK.

2. THE CONTRACTOR SHALL INFORM THE CITY OF CUYAHOGA FALLS (330) 971-8180 AND THE ODOT DISTRICT OFFICE (330) 786-2211, EIGHTEEN (18) DAYS PRIOR TO THE BEGINNING OF WORK.

3. CONES SHALL NOT BE ACCEPTABLE TRAFFIC CONTROL DEVICES FOR LANE RESTRICTIONS OR LANE REDUCTIONS THAT ARE IN OPERATION ONE HALF-HOUR AFTER SUNSET OR ONE HALF-HOUR BEFORE SUNRISE. ALL NIGHTTIME LANE RESTRICTIONS SHALL REQUIRE DRUMS OR BARRICADES AT A MAXIMUM SPACING OF FIFTY (50) FEET. WEIGHTED CHANNELIZERS MAY BE USED IN ACCORDANCE WITH THE ADDITIONAL NOTE HEREIN.

4. LANE RESTRICTIONS OR REDUCTIONS SHALL NOT BE PERMITTED AFTER NORMAL WORKING HOURS. NORMAL WORKING HOURS SHALL BE THOSE HOURS DURING WHICH THE CONTRACTOR HAS A FULL COMPLEMENT OF EMPLOYEES AND EQUIPMENT ACTIVELY REMOVING AND/OR PLACING PAVEMENT MATERIALS.

5. THE CONTRACTOR SHALL FURNISH, ERECT, MAINTAIN AND SUBSEQUENTLY REMOVE ALL FLAGS, BARRICADES, SIGNS, SIGN SUPPORTS AND FURNISH AND MAINTAIN ALL FLAGGERS, WATCHERS AND INCIDENTALS RELATED THERETO.

6. ALL FULL DEPTH PAVEMENT REMOVAL AND REPLACEMENT OPERATIONS SHALL BE COMPLETED THE SAME DAY THE EXCAVATION IS MADE. IF THE CONTRACTOR CANNOT COMPLETE THE WORK, THE EXCAVATION SHALL BE BACKFILLED.

7. UNDER NO CIRCUMSTANCES SHALL THE CONTRACTOR BE PERMITTED TO HAVE SUCCESSIVE WORK ZONES UNLESS THE DISTANCE BETWEEN THE DRUMS, BARRICADES OR CONES EXCEEDS ONE (1) MILE.

8. NO WORK SHALL BE PERFORMED BETWEEN 10:00PM AND 7:00AM DAILY.

9. IN ADDITION TO THE REQUIREMENTS OF 614.11 WORK ZONE PAVEMENT MARKINGS, AT THE END OF EACH DAY OF WORK, THE CONTRACTOR SHALL REPLACE (WITH WORK ZONE MARKINGS) ALL CENTER, STOP OR CHANNELIZING LINES THAT WERE REMOVED OR COVERED DURING THE PAVEMENT REMOVAL OR PLACEMENT OPERATIONS.

10. A QUANTITY OF 614 ASPHALT CONCRETE FOR MAINTAINING TRAFFIC SHALL BE PROVIDED FOR USE IN MAINTAINING PAVEMENT, SHOULDERS AND OTHER LOCATIONS AS DIRECTED BY THE ENGINEER.

    THE FOLLOWING ESTIMATED QUANTITY HAS BEEN CARRIED TO THE GENERAL SUMMARY:

614, ASPHALT CONCRETE FOR MAINTAINING TRAFFIC	50 CU YD

11. PRIOR TO OPENING TO TRAFFIC, EACH LANE SHALL BE IN A SAFE, PASSABLE CONDITION AS APPROVED BY THE ENGINEER.

12. A QUANTITY OF ITEM 614 WORK ZONE MARKING SIGN HAS BEEN INCLUDED IN THE PLAN. THIS QUANTITY SHALL INCLUDE, BUT NOT BE LIMITED TO, THE FOLLOWING SIGNS: W8-1 [BUMP], W6-3 [TWO-WAY TRAFFIC], W8-H13 [NO EDGE LINES], R4-1 [DO NOT PASS], R4-2 [PASS WITH CARE], W8-11 [UNEVEN LANES]. THESE QUANTITIES SHALL BE AS PER 614.04.

THE FOLLOWING QUANTITIES SHALL BE USED FOR THE MAINTENANCE OF TRAFFIC ON THIS PROJECT:

PHASE 1 - PLANED SURFACE

614, WORK ZONE CENTER LINE, CLASS III, 642 PAINT	1.40 MILE
614, WORK ZONE STOP LINE, CLASS III, 642 PAINT	12 FT
614, WORK ZONE MARKING SIGN (ALL PHASES)	12 EACH

PHASE 2 - INTERMEDIATE COURSE

614, WORK ZONE CENTER LINE, CLASS III, 642 PAINT	1.40 MILE
614, WORK ZONE STOP LINE, CLASS III, 642 PAINT	12 FT

PHASE 3 - SURFACE COURSE

614, WORK ZONE CENTER LINE, CLASS III, 642 PAINT	1.40 MILE
614, WORK ZONE STOP LINE, CLASS III, 642 PAINT	12 FT

TO BE USED AS DIRECTED BY THE ENGINEER:

614, WORK ZONE EDGE LINE, CLASS III, 6", 642 PAINT	2.05 MILE

13. LENGTH AND DURATION OF LANE CLOSURES AND RESTRICTIONS SHALL BE AT THE APPROVAL OF THE ENGINEER. IT IS THE INTENT TO MINIMIZE THE IMPACT TO THE TRAVELING PUBLIC. LANE CLOSURES OR RESTRICTIONS OVER SEGMENTS OF THE PROJECT IN WHICH NO WORK IS ANTICIPATED WITHIN A REASONABLE TIME FRAME, AS DETERMINED BY THE ENGINEER, SHALL NOT BE PERMITTED. THE LEVEL OF UTILIZATION OF MAINTENANCE OF TRAFFIC DEVICES SHALL BE COMMENSURATE WITH THE WORK IN PROGRESS.

14. ALL WORK AND TRAFFIC CONTROL DEVICES SHALL BE IN ACCORDANCE WITH CMS 614 AND OTHER APPLICABLE PORTIONS OF THE SPECIFICATIONS, AS WELL AS THE OHIO MANUAL OF UNIFORM TRAFFIC CONTROL DEVICES. PAYMENT FOR ALL LABOR, EQUIPMENT AND MATERIALS SHALL BE INCLUDED IN THE LUMP SUM CONTRACT PRICE FOR ITEM 614, MAINTAINING TRAFFIC, UNLESS SEPARATELY ITEMIZED IN THE PLAN.

15. EMERGENCY VEHICLES SHALL BE ABLE TO PASS AT ALL TIMES.

16. AT THE END OF EACH NORMAL BUSINESS DAY ALL LANES OF TRAFFIC SHALL BE FULLY OPEN TO TRAFFIC.

17. THE CONTRACTOR SHALL FURNISH A LOCATION OUTSIDE THE CITY RIGHT-OF-WAY FOR ALL PERSONAL VEHICLES BELONGING TO THE CONTRACTOR'S PERSONNEL AND SUPPLIERS AS PART OF THEIR COST FOR THIS BID ITEM. CONSTRUCTION VEHICLES NOT BEING USED DURING DAILY REGULAR OPERATIONS SHALL BE PARKED AT THIS SITE OR A CONSTRUCTION VEHICLE SITE OUTSIDE THE CITY RIGHT-OF-WAY.

CONTRACTOR'S EQUIPMENT - OPERATION AND STORAGE

A QUALIFIED FLAGGER SHALL BE EMPLOYED WHERE THE CONTRACTOR'S EQUIPMENT MUST MERGE WITH THE TRAFFIC STREAM. THE CONTRACTOR'S EQUIPMENT SHALL BE EQUIPPED WITH AT LEAST ONE AMBER FLASHING LIGHT. PAVERS, ROLLERS AND OTHER EQUIPMENT MAY BE PARKED IN AREAS ALONG THE ROADWAY WHEN PAVING OPERATIONS ARE SCHEDULED TO CONTINUE WITHIN THE NEXT WORKDAY. OTHERWISE THE EQUIPMENT SHALL BE STORED AT A STORAGE AREA OUTSIDE THE R/W, THE LOCATION OF WHICH SHALL HAVE PRIOR APPROVAL OF THE ENGINEER. WHEN PARKING ALONG THE ROADWAY THE EQUIPMENT SHALL BE PLACED AND DELINEATED AS PER 614.03. ADEQUATE BARRICADES AND LIGHTS SHALL BE PLACED ON THE PAVEMENT SIDE OF THE EQUIPMENT TO IDENTIFY THE LIMITS OF THE EQUIPMENT. ALL OTHER EQUIPMENT, INCLUDING PRIVATE VEHICLES, SHALL BE STORED AT THE APPROVED CONTRACTOR'S STORAGE AREA. NO EQUIPMENT SHALL BE PARKED ON PRIVATE PROPERTY UNLESS PRIOR APPROVAL OF THE OWNER AND THE PROJECT ENGINEER / SUPERVISOR HAS BEEN GRANTED.

ADVANCED NOTICE TO PAVE

THE CONTRACTOR SHALL SUBMIT FOR APPROVAL TO THE CITY OF CUYAHOGA FALLS CONSTRUCTION ENGINEER A DETAILED SCHEDULE FIFTEEN (15) DAYS PRIOR TO THE PLACEMENT OF THE OVERLAY COURSES, ON HOW THEY PROPOSE TO PROSECUTE THE PAVING OPERATIONS. THE DETAILS SHALL SHOW THE ORDER OF PERFORMANCE OF EACH STAGE (START TO FINISH) OF THE WORK INCLUDING THE MAINTENANCE OF TRAFFIC THAT WILL BE USED.

TRAFFIC CONTROL INSPECTOR

THE CONTRACTOR SHALL DESIGNATE AN INDIVIDUAL OTHER THAN THE SUPERINTENDENT AND SUBJECT TO THE APPROVAL OF THE ENGINEER, TO CONTINUOUSLY INSPECT ALL TRAFFIC CONTROL DEVICES WHENEVER CONSTRUCTION WORK IS BEING PERFORMED WITHIN THE WORK LIMITS OF THE PROJECT. THE DESIGNATED INDIVIDUAL SHALL ALSO INSPECT ALL TRAFFIC DEVICES AT THE BEGINNING AND AT THE END OF EACH WORK DAY. THE DESIGNATED INDIVIDUAL OR A QUALIFIED REPRESENTATIVE SHALL ALSO BE AVAILABLE ON AN AROUND-THE-CLOCK BASIS TO REPAIR AND/OR REPLACE DAMAGED OR MISSING TRAFFIC CONTROL DEVICES. THESE INDIVIDUALS SHALL BE EQUIPPED WITH CELLULAR PHONES AND THEIR NAMES AND PHONE NUMBERS SHALL BE GIVEN TO THE PROJECT ENGINEER AT THE PRE-CONSTRUCTION MEETING. THE DESIGNATED INDIVIDUAL MAY HAVE OTHER CONSTRUCTION RELATED DUTIES AS LONG AS IMMEDIATE ATTENTION IS GIVEN TO TRAFFIC CONTROL. PAYMENT FOR THE TRAFFIC CONTROL INSPECTOR SHALL BE INCLUDED IN THE LUMP SUM PRICE BID FOR ITEM 614 MAINTAINING TRAFFIC.

ITEM 614 - MAINTAINING TRAFFIC (LANES OPEN DURING HOLIDAYS OR SPECIAL EVENTS)

NO WORK SHALL BE PERFORMED AND ALL EXISTING LANES SHALL BE OPEN TO TRAFFIC DURING THE FOLLOWING DESIGNATED HOLIDAYS OR EVENTS:

BLOSSOM MUSIC CENTER EVENTS	DATES TO BE DETERMINED BY THE ENGINEER
CHRISTMAS	FOURTH OF JULY
NEW YEARS	LABOR DAY
MEMORIAL DAY	THANKSGIVING

THE PERIOD OF TIME THAT THE LANES ARE TO BE OPEN DEPENDS ON THE DAY OF THE WEEK ON WHICH THE HOLIDAY OR EVENT FALLS. THE FOLLOWING SCHEDULE SHALL BE USED TO DETERMINE THIS PERIOD:

DAY OF HOLIDAY OR EVENT	TIME ALL LANES MUST BE OPEN TO TRAFFIC
SUNDAY	12:00N FRIDAY THROUGH (6:00 AM) MONDAY
MONDAY	12:00N FRIDAY THROUGH (6:00 AM) TUESDAY
TUESDAY	12:00N MONDAY THROUGH (6:00 AM) WEDNESDAY
WEDNESDAY	12:00N TUESDAY THROUGH (6:00 AM) THURSDAY
THURSDAY	12:00N WEDNESDAY THROUGH (6:00 AM) FRIDAY
THURSDAY (THANKSGIVING ONLY)	12:00N WEDNESDAY THROUGH (6:00 AM) MONDAY
FRIDAY	12:00N THURSDAY THROUGH (6:00 AM) MONDAY
SATURDAY	12:00N FRIDAY THROUGH (6:00 AM) MONDAY

NO EXTENSIONS OF TIME SHALL BE GRANTED FOR DELAYS IN MATERIAL DELIVERIES, UNLESS SUCH DELAYS ARE INDUSTRY-WIDE, OR FOR LABOR STRIKES, UNLESS SUCH STRIKES ARE AREA-WIDE. SHOULD THE CONTRACTOR FAIL TO MEET ANY OF THESE REQUIREMENTS, THE CONTRACTOR SHALL BE ASSESSED A DISINCENTIVE IN THE AMOUNT OF $50 FOR EACH MINUTE THE ABOVE DESCRIBED LANE CLOSURE RESTRICTIONS ARE VIOLATED.

FAILURE TO COMPLY

FOR ANY FAILURE TO COMPLY WITH PROVISIONS FOR TRAFFIC CONTROL SET OUT IN THESE PLANS AND NOTES OR WITH THE PROVISIONS OF THE ODOT 2016 CMS AND/OR OMUTCD MANUALS, THE ROADWAY IN THE VICINITY OF THE WORK AREA SHALL BE CONSIDERED IN A CONDITION UNACCEPTABLE FOR THE SAFETY AND CONVENIENT USE BY THE TRAVELING PUBLIC. ANY FAILURE TO KEEP THE ROADWAY IN THE VICINITY OF THE WORKING AREA IN A CONDITION ACCEPTABLE FOR THE SAFE AND CONVENIENT USE BY THE TRAVELING PUBLIC SHALL BE CONSIDERED A BREACH OF CONTRACT. WORK SHALL BE SUSPENDED UNTIL THE CONTRACTOR COMPLIES WITH THE PROVISIONS OF THE AFOREMENTIONED ITEMS.

WEIGHTED CHANNELIZERS

THE WEIGHTED CHANNELIZERS SHALL BE PREDOMINATELY ORANGE IN COLOR AND SHALL BE MADE OF A LIGHTWEIGHT, FLEXIBLE, AND DEFORMABLE MATERIAL. THEY SHALL BE AT LEAST FORTY-TWO (42) INCHES IN HEIGHT WITH A WEIGHTED BASE. THEY MAY HAVE A "HANDLE" OR LIFTING DEVICE WHICH EXTENDS ABOVE THE 42 INCH MINIMUM HEIGHT.

THE MARKINGS ON THE WEIGHTED CHANNELIZER SHALL BE HORIZONTAL, CIRCUMFERENTIAL, ALTERNATING ORANGE AND WHITE RETROREFLECTIVE STRIPES SIX (6) INCHES WIDE. EACH WEIGHTED CHANNELIZER SHALL HAVE A MINIMUM OF TWO ORANGE AND TWO WHITE STRIPES. ANY NON-RETROREFLECTIVE SPACES BETWEEN THE HORIZONTAL ORANGE AND WHITE STRIPES SHALL NOT EXCEED TWO (2) INCHES WIDE. THE WEIGHTED CHANNELIZER SHALL HAVE A FOUR (4) INCH MINIMUM WIDTH, REGARDLESS OF ORIENTATION.

THERE ARE NO DURATIONS OF WORK RESTRICTIONS FOR USE OF WEIGHTED CHANNELIZERS, DAY OR NIGHT. ON THIS ROADWAY THE WEIGHTED CHANNELIZER MAY BE USED IN THE TRANSITION TAPERS AS WELL AS IN THE TANGENT AREAS, DAY OR NIGHT.

MAXIMUM SPACING OF THE WEIGHTED CHANNELIZER SHALL BE FORTY (40) FEET.

STEPS SHOULD BE TAKEN TO ENSURE THAT THE WEIGHTED CHANNELIZERS WILL NOT BE BLOWN OVER OR DISPLACED BY WIND OR MOVING TRAFFIC. BALLASTS SHOULD NOT PRESENT A HAZARD IF THE WEIGHTED CHANNELIZERS ARE INADVERTENTLY STRUCK, NOR SHOULD THEY AFFECT THE VISIBILITY OF THE WEIGHTED CHANNELIZERS. ALL BALLASTS USED SHOULD BE IN ACCORDANCE WITH THE MANUFACTURER'S SPECIFICATIONS.

PAYMENT FOR FURNISHING, INSTALLING, MAINTAINING AND REMOVING WEIGHTED CHANNELIZIERS SHALL BE INCLUDED IN THE LUMP SUM PRICE BID FOR ITEM 614, MAINTAINING TRAFFIC.

TEMPORARY RAMPING OF VERTICAL SURFACES AT DRIVEWAYS

IN ORDER TO PROVIDE FOR LOCAL ACCESS, LONGITUDINAL VERTICAL FACES ABUTTING DRIVES SHALL BE TEMPORARILY RAMPED AS DETAILED BELOW. TRANSVERSE VERTICAL FACES SHALL BE TEMPORARILY RAMPED A MAXIMUM OF TWO FEET IN LENGTH AND TRAFFIC SHALL BE WARNED WITH W8-1 [BUMP] SIGNS IN ADVANCE OF THE RAMPED AREAS. THE GRADE BREAK SHALL NOT EXCEED A MAXIMUM OF 8 PERCENT AT EITHER END OF THE WEDGE.

ALL TEMPORARY RAMPING SHALL BE INSTALLED, AT THE DIRECTION OF THE ENGINEER, USING
ITEM 614 - ASPHALT CONCRETE FOR MAINTAINING TRAFFIC.

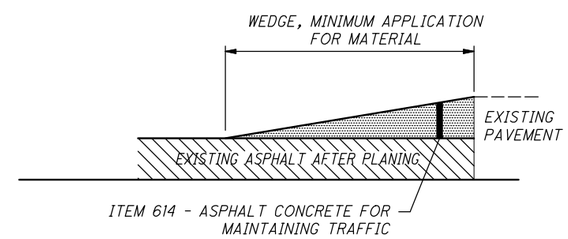

CALCULATED DRG
CHECKED AMP

GENERAL NOTES

SUM-W. STEELS CORNERS RD.
RESURFACING (PID 102904)

Z:\Akron-USAKR3\DCS\Projects\TRN\60584787_WSteelRes\900_CAD_GIS\910_CAD\05-MODELS\102904\Design\Roadway\Sheets\102904_GN001.dwg 30-Jun-20 10:37 AM

ALTERNATE MAINTENANCE OF TRAFFIC PLANS

IF THE CONTRACTOR SO ELECTS, HE MAY SUBMIT ALTERNATE METHODS FOR THE MAINTENANCE OF TRAFFIC TO THE CITY OF CUYAHOGA FALLS FOR APPROVAL, PROVIDED THE INTENT OF THE ABOVE PROVISIONS ARE FOLLOWED AND NO ADDITIONAL INCONVENIENCE TO THE TRAVELING PUBLIC RESULTS THEREFROM. NO ALTERNATIVE PLAN SHALL BE PLACED INTO EFFECT UNTIL APPROVAL HAS BEEN GRANTED IN WRITING BY THE PROJECT ENGINEER.

WINTER TRAFFIC LIMITATIONS

ALL TRAFFIC LANES SHALL BE OPEN TO TRAFFIC BETWEEN NOVEMBER 2 AND APRIL 1. NOVEMBER 1 SHALL BE CONSIDERED TO CONSTITUTE AN INTERIM COMPLETION DATE AND DISINCENTIVES OF $750 SHALL BE ASSESSED FOR EACH CALENDAR DAY THAT THE ROADWAY REMAINS CLOSED TO TRAFFIC BEYOND THE SPECIFIED LIMIT. THE CONTRACTOR MAY CLOSE LANES PRIOR TO APRIL 1 WITH WRITTEN APPROVAL FROM THE CITY OF CUYAHOGA FALLS.

PAVEMENT DROP-OFF

ANY PAVEMENT HAVING A VERTICAL ELEVATION DIFFERENTIAL GREATER THAN 1-1/4" WITH THE ABUTTING EXISTING PAVEMENT, THAT IS TO BE USED FOR TRAFFIC SHALL HAVE A WEDGE TREATMENT OF EITHER ITEM 614 - ASPHALT CONCRETE FOR MAINTAINING TRAFFIC OR ITEM 254 - A TAPERED PLANING OF EXISTING PAVEMENT. ALL WORK SHALL BE INCLUDED IN THE LUMP SUM BID FOR ITEM 614 - MAINTAINING TRAFFIC.

ITEM 614 - LAW ENFORCEMENT OFFICER WITH PATROL CAR FOR ASSISTANCE

USE OF LAW ENFORCEMENT OFFICERS (LEOS) BY CONTRACTORS OTHER THAN THE USES SPECIFIED BELOW WILL NOT BE PERMITTED AT PROJECT COST. LEOS SHOULD NOT BE USED WHERE THE OMUTCD INTENDS THAT FLAGGERS BE USED.

IN ADDITION TO THE REQUIREMENTS OF CMS 614 AND THE OMUTCD, A UNIFORMED LEO WITH AN OFFICIAL PATROL CAR (CAR WITH TOP-MOUNTED EMERGENCY FLASHING LIGHTS AND COMPLETE MARKINGS OF THE APPROPRIATE LAW ENFORCEMENT AGENCY) SHALL BE PROVIDED FOR THE FOLLOWING TRAFFIC CONTROL TASKS:

- DURING THE ENTIRE ADVANCE PREPARATION AND CLOSURE SEQUENCE WHERE COMPLETE BLOCKAGE OF TRAFFIC IS REQUIRED.
- DURING A TRAFFIC SIGNAL INSTALLATION WHEN IMPACTING THE NORMAL FUNCTION OF THE SIGNAL OR THE FLOW OF TRAFFIC OR WHEN TRAFFIC NEEDS TO BE DIRECTED THROUGH AN ENERGIZED TRAFFIC SIGNAL CONTRARY TO THE SIGNAL DISPLAY (E.G., DIRECTING MOTORISTS THROUGH A RED LIGHT).
- FOR LANE CLOSURES: DURING INITIAL SET-UP PERIODS, TEAR DOWN PERIODS, SUBSTANTIAL SHIFTS OF A CLOSURE POINT OR WHEN NEW LANE CLOSURE ARRANGEMENTS ARE INITIATED FOR LONG-TERM LANE CLOSURES/SHIFTS (FOR THE FIRST AND LAST DAY OF MAJOR CHANGES IN TRAFFIC CONTROL SETUP). IN GENERAL, LEOS SHOULD BE POSITIONED AT THE POINT OF LANE RESTRICTION OR ROAD CLOSURE AND TO MANUALLY CONTROL TRAFFIC MOVEMENTS THROUGH INTERSECTIONS IN WORK ZONES.
- WHEN CONSTRUCTION VEHICLES ARE ENTERING/EXITING THE ZONE DIRECTLY FROM/INTO AN OPEN LANE OF TRAFFIC. IF A LANE HAS BEEN CLOSED TO PROVIDE AN ACCELERATION/DECELERATION LANE FOR THE VEHICLE, THE LEO WILL NOT BE REQUIRED.

LEOS SHOULD NOT FORGO THEIR TRAFFIC CONTROL RESPONSIBILITIES TO APPREHEND MOTORISTS FOR ROUTINE TRAFFIC VIOLATIONS. HOWEVER, IF A MOTORIST'S ACTIONS ARE CONSIDERED TO BE RECKLESS, THEN PURSUIT OF THE MOTORIST IS APPROPRIATE.

THE LEOS WORK AT THE DIRECTION OF THE CONTRACTOR. THE CONTRACTOR IS RESPONSIBLE FOR SECURING THE SERVICES OF THE LEOS WITH THE APPROPRIATE AGENCIES AND COMMUNICATING THE INTENTIONS OF THE PLANS WITH RESPECT TO DUTIES OF THE LEOS. THE ENGINEER SHALL HAVE FINAL CONTROL OVER THE LEOS' DUTIES AND PLACEMENT, AND WILL RESOLVE ANY ISSUES THAT MAY ARISE BETWEEN THE TWO PARTIES.

THE LEO SHALL REPORT IN TO THE CONTRACTOR PRIOR TO THE START OF THE SHIFT, IN ORDER TO RECEIVE INSTRUCTIONS REGARDING SPECIFIC WORK ASSIGNMENTS DURING HIS/HER SHIFT. THE LEO IS EXPECTED TO STAY AT THE PROJECT SITE FOR THE ENTIRE DURATION OF HIS/HER SHIFT. THE LEO SHALL REPORT TO THE CONTRACTOR AT THE END OF HIS/HER SHIFT. ONCE THE LEO HAS COMPLETED THE DUTIES DESCRIBED ABOVE AND STILL HAS TIME REMAINING ON HIS/HER SHIFT, THE LEO MAY BE ASKED TO PATROL THROUGH THE WORK ZONE (WITH FLASHING LIGHTS OFF) OR BE PLACED AT A LOCATION TO DETER MOTORISTS FROM SPEEDING. SHOULD IT BE NECESSARY TO LEAVE THE PROJECT SITE, THE LEO SHALL NOTIFY THE ENGINEER. THE CONTRACTOR SHALL PROVIDE THE LEO WITH A TWO-WAY COMMUNICATION DEVICE WHICH SHALL BE RETURNED TO THE CONTRACTOR AT THE END OF HIS/HER SHIFT.

LEOS (WITH PATROL CAR) REQUIRED BY THE TRAFFIC MAINTENANCE TASKS ABOVE SHALL BE PAID FOR ON A UNIT PRICE (HOURLY) BASIS UNDER ITEM 614, LAW ENFORCEMENT OFFICER WITH PATROL CAR FOR ASSISTANCE. THE FOLLOWING ESTIMATED QUANTITIES HAVE BEEN CARRIED TO THE GENERAL SUMMARY.

614, LAW ENFORCEMENT OFFICER WITH PATROL CAR FOR ASSISTANCE	64 HOURS

THE HOURS PAID SHALL INCLUDE ANY MINIMUM SHOW-UP TIME REQUIRED BY THE LAW ENFORCEMENT AGENCY INVOLVED.

ANY ADDITIONAL COSTS (ADMINISTRATIVE OR OTHERWISE) INCURRED BY THE CONTRACTOR TO OBTAIN THE SERVICES OF AN LEO ARE INCLUDED WITH THE BID UNIT PRICE FOR ITEM 614, LAW ENFORCEMENT OFFICER WITH PATROL CAR FOR ASSISTANCE.

Z:\Akron-USAKR3\DCS\Projects\TRN\60584787_WSteelRes\900_CAD_GIS\910_CAD\05-MODELS\102904\Design\Roadway\Sheets\102904_GN001.dwg 30-Jun-20 10:37 AM

CALCULATED DRG
CHECKED AMP

GENERAL NOTES

SUM-W. STEELS CORNERS RD.
RESURFACING (PID 102904)

OFFICE CALCS	4	5	6	7	9	9	10	10	11	ITEM	ITEM EXT.	GRAND TOTAL	UNIT	DESCRIPTION	SEE SHEET NO.
														ROADWAY	
					64					202	30000	64	SF	WALK REMOVED	
					2010					202	38000	2010	FT	GUARDRAIL REMOVED	
	30									203	10001	30	CY	EXCAVATION, AS PER PLAN	4
		2								209	15000	2	STA	RESHAPING UNDER GUARDRAIL	5
		1.03								209	72051	1.03	MILE	PREPARING SUBGRADE FOR SHOULDER PAVING, AS PER PLAN	5
					908					606	15051	908	FT	GUARDRAIL, TYPE MGS, AS PER PLAN	5
					22					606	26100	22	EACH	ANCHOR ASSEMBLY, TYPE E	
					64					608	52000	64	SF	CURB RAMP	
					8					608	53020	8	SF	DETECTABLE WARNING	
		150								609	98000	150	FT	CURB, MISC.: CURB, TYPE 6 REPAIR	5
					9					623	39500	9	EACH	MONUMENT BOX ADJUSTED TO GRADE	
														DRAINAGE/WATERWORK	
							10			611	98630	10	EACH	CATCH BASIN ADJUSTED TO GRADE	
							4			611	99654	4	EACH	MANHOLE ADJUSTED TO GRADE	
	1000									SPECIAL	61199820	1000	LB	MISCELLANEOUS METAL	4
							2			638	10800	2	EACH	VALVE BOX ADJUSTED TO GRADE	
														PAVEMENT	
	3103									251	01000	3103	SY	PARTIAL DEPTH PAVEMENT REPAIR (441)	4
	1552									253	01000	1552	SY	PAVEMENT REPAIR	4
31037						1231				254	01000	32268	SY	PAVEMENT PLANING, ASPHALT CONCRETE	
	30									304	20001	30	CY	AGGREGATE BASE, AS PER PLAN	4
4655						111				407	20000	4766	GAL	NON-TRACKING TACK COAT	
1078									15	441	10100	1093	CY	ASPHALT CONCRETE SURFACE COURSE, TYPE 1, (446), PG70-22M	
1509										441	10200	1509	CY	ASPHALT CONCRETE INTERMEDIATE COURSE, TYPE 2, (446)	
						38				441	50400	38	CY	ASPHALT CONCRETE SURFACE COURSE, TYPE 1, (448), (DRIVEWAYS)	5
		100								617	10101	100	CY	COMPACTED AGGREGATE, AS PER PLAN	5
														TRAFFIC CONTROL	
								2.05		646	10010	2.05	MILE	EDGE LINE, 6"	
								1.38		646	10110	1.38	MILE	LANE LINE, 6"	
								1.40		646	10200	1.40	MILE	CENTER LINE	
								192		646	10310	192	FT	CHANNELIZING LINE, 12"	
								11		646	10400	11	FT	STOP LINE	
								1		646	20300	1	EACH	LANE ARROW	
														MAINTENANCE OF TRAFFIC	
				64						614	11110	64	HOUR	LAW ENFORCEMENT OFFICER WITH PATROL CAR FOR ASSISTANCE	
			12							614	12460	12	EACH	WORK ZONE MARKING SIGN	
			50							614	13000	50	CY	ASPHALT CONCRETE FOR MAINTAINING TRAFFIC	
			4.20							614	21550	4.20	MILE	WORK ZONE CENTER LINE, CLASS III, 642 PAINT	
			2.05							614	22360	2.05	MILE	WORK ZONE EDGE LINE, CLASS III, 6", 642 PAINT	
			36							614	26610	36	FT	WORK ZONE STOP LINE, CLASS III, 642 PAINT	
														INCIDENTALS	
										614	11000	LS		MAINTAINING TRAFFIC	
										624	10000	LS		MOBILIZATION	

CALCULATED DRG
CHECKED AMP

GENERAL SUMMARY

SUM-W. STEELS CORNERS RD.
RESURFACING (PID 102904)

Z:\Akron-USAKR3\DCS\Projects\TRN\60584787_WSteelRes\900_CAD_GIS\910_CAD\05-MODELS\102904\Design\Roadway\Sheets\102904_GG001.dwg 30-Jun-20 10:38 AM

ROADWAY SUBSUMMARY

PLAN SHEET NO.	REFERENCE NO.	STATION FROM	STATION TO	SIDE		202 WALK REMOVED	202 GUARDRAIL REMOVED	606 GUARDRAIL, TYPE MGS, AS PER PLAN	606 ANCHOR ASSEMBLY, TYPE E	608 CURB RAMP	608 DETECTABLE WARNING	623 MONUMENT BOX ADJUSTED TO GRADE	
						SF	FT	FT	EACH	SF	SF	EACH	
		STATE ROAD											
12	GR-1	122+87.00	125+49.50	LT			263	162.50	2				
12	GR-2	123+17.00	124+29.50	RT			113	12.50	2				
12	M-1	126+50.20		CEN								1	
12	GR-3	128+94.00	132+20.50	RT			327	226.50	2				
12	GR-4	136+70.75	138+27.00	LT			156	56.25	2				
12	GR-5	136+72.50	137+97.50	RT			125	25.00	2				
13	M-2	140+50.20		CEN								1	
13	GR-6	145+28.00	146+90.50	LT			163	62.50	2				
13	GR-7	146+09.00	147+21.50	RT			113	12.50	2				
13	M-3	147+42.10		CEN								1	
13	GR-8	151+65.00	153+90.00	RT			225	125.00	2				
13	GR-9	151+98.00	154+23.00	LT			225	125.00	2				
14	CR-1	160+89.00		RT							8		
14	CR-2	161+35.00		RT		64				64			
14	M-4	160+99.40		CEN								1	
14	M-5	161+12.30		RT								1	
14	GR-10	167+25.00	169+00.00	LT			175	75.00	2				
14	GR-11	167+79.00	169+04.00	RT			125	25.00	2				
14	M-6	171+87.20		CEN								1	
15	M-7	184+35.80		CEN								1	
15	M-8	185+52.30		CEN								1	
15	M-9	190+39.93		CEN								1	
TOTALS CARRIED TO GENERAL SUMMARY						64	2010	908	22	64	8	9	

DRIVEWAY SUBSUMMARY

SHEET NO.	REF NO.	STATION	SIDE	EXISTING DRIVE COMPOSITION	APRON AREA		254 PAVEMENT PLANING, ASPHALT CONCRETE	407 NON-TRACKING TACK COAT	441 ASPHALT CONCRETE SURFACE COURSE, TYPE 1, (448), (DRIVEWAYS)	441 ASPHALT CONCRETE SURFACE COURSE, TYPE 1, (448), (DRIVEWAYS)
					CADD		A1/9	(0.09xA)	(1xA1)	(2xA1)
					A1			9	(12x27)	(12x27)
					SQ FT		SY	GAL	CY	CY
	WEST STEELS CORNERS ROAD									
12	DR-1	138+52.00	LT	ASPHALT	238.00		26.44	2.38	0.73	
12	DR-2	138+54.00	RT	ASPHALT	178.00		19.78	1.78	0.55	
12	DR-3	139+95.00	LT	ASPHALT	198.00		22.00	1.98	0.61	
13	DR-4	140+59.00	RT	ASPHALT	338.00		37.56	3.38	1.04	
13	DR-5	141+10.00	RT	ASPHALT	198.00		22.00	1.98	0.61	
13	DR-6	141+86.00	RT	ASPHALT	198.00		22.00	1.98	0.61	
13	DR-7	141+91.00	LT	ASPHALT	198.00		22.00	1.98	0.61	
13	DR-8	142+58.00	LT	ASPHALT	198.00		22.00	1.98	0.61	

DRIVEWAY SUBSUMMARY

SHEET NO.	REF NO.	STATION	SIDE	EXISTING DRIVE COMPOSITION	APRON AREA		254 PAVEMENT PLANING, ASPHALT CONCRETE	407 NON-TRACKING TACK COAT	441 ASPHALT CONCRETE SURFACE COURSE, TYPE 1, (448), (DRIVEWAYS)	441 ASPHALT CONCRETE SURFACE COURSE, TYPE 1, (448), (DRIVEWAYS)
					CADD		A1/9	(0.09xA)	(1xA1)	(2xA1)
					A1			9	(12x27)	(12x27)
					SQ FT		SY	GAL	CY	CY
13	DR-9	142+81.00	RT	ASPHALT	198.00		22.00	1.98	0.61	
13	DR-10	143+70.00	RT	ASPHALT	218.00		24.22	2.18	0.67	
13	DR-11	144+58.00	RT	ASPHALT	218.00		24.22	2.18	0.67	
13	DR-12	145+64.00	RT	ASPHALT	178.00		19.78	1.78	0.55	
13	DR-13	147+85.00	RT	ASPHALT	198.00		22.00	1.98	0.61	
13	DR-14	149+20.00	LT	ASPHALT	178.00		19.78	1.78	0.55	
13	DR-15	150+09.00	RT	ASPHALT	198.00		22.00	1.98	0.61	
13	DR-16	150+98.00	RT	ASPHALT	258.00		28.67	2.58	0.80	
13	DR-17	154+80.00	LT	ASPHALT	178.00		19.78	1.78	0.55	
14	DR-18	161+39.00	LT	ASPHALT	178.00		19.78	1.78	0.55	
14	DR-19	162+56.00	LT	ASPHALT	178.00		19.78	1.78	0.55	
14	DR-20	164+11.00	LT	ASPHALT	298.00		33.11	2.98	0.92	
14	DR-21	166+69.00	LT	ASPHALT	298.00		33.11	2.98	0.92	
14	DR-22	167+07.00	LT	ASPHALT	278.00		30.89	2.78	0.86	
14	DR-23	167+58.00	RT	ASPHALT	198.00		22.00	1.98	0.61	
14	DR-24	168+79.00	LT	ASPHALT	458.00		50.89	4.58	1.41	
14	DR-25	170+13.00	RT	ASPHALT	178.00		19.78	1.78	0.55	
14	DR-26	170+73.00	LT	ASPHALT	258.00		28.67	2.58	0.80	
14	DR-27	171+74.00	LT	ASPHALT	198.00		22.00	1.98	0.61	
14	DR-28	172+78.00	RT	ASPHALT	178.00		19.78	1.78	0.55	
14	DR-29	173+73.00	LT	ASPHALT	258.00		28.67	2.58	0.80	
14	DR-30	174+32.00	LT	AGGREGATE	278.00					1.72
14	DR-31	175+16.00	RT	ASPHALT	178.00		19.78	1.78	0.55	
14	DR-32	175+37.00	LT	ASPHALT	178.00		19.78	1.78	0.55	
14	DR-33	175+93.00	LT	ASPHALT	238.00		26.44	2.38	0.73	
14	DR-34	176+50.00	RT	AGGREGATE	218.00					1.35
14	DR-35	177+57.00	LT	ASPHALT	178.00		19.78	1.78	0.55	
14	DR-36	177+81.00	RT	AGGREGATE	218.00					1.35
14	DR-37	178+26.00	RT	ASPHALT	178.00		19.78	1.78	0.55	
14	DR-38	178+68.00	RT	ASPHALT	178.00		19.78	1.78	0.55	
15	DR-39	179+59.00	LT	ASPHALT	178.00		19.78	1.78	0.55	
15	DR-40	180+41.00	LT	ASPHALT	178.00		19.78	1.78	0.55	
15	DR-41	181+29.00	RT	ASPHALT	178.00		19.78	1.78	0.55	
15	DR-42	181+85.00	LT	ASPHALT	178.00		19.78	1.78	0.55	
15	DR-43	182+85.00	RT	ASPHALT	218.00		24.22	2.18	0.67	
15	DR-44	183+24.00	RT	ASPHALT	178.00		19.78	1.78	0.55	
15	DR-45	185+70.00	RT	ASPHALT	178.00		19.78	1.78	0.55	
15	DR-46	186+88.00	LT	ASPHALT	178.00		19.78	1.78	0.55	
15	DR-47	187+89.00	RT	ASPHALT	278.00		30.89	2.78	0.86	
15	DR-48	188+06.00	LT	ASPHALT	238.00		26.44	2.38	0.73	
15	DR-49	188+71.00	RT	ASPHALT	178.00		19.78	1.78	0.55	
15	DR-50	189+39.00	RT	ASPHALT	178.00		19.78	1.78	0.55	
15	DR-51	190+93.00	RT	ASPHALT	178.00		19.78	1.78	0.55	
15	DR-52	192+86.00	LT	ASPHALT	178.00		19.78	1.78	0.55	
15	DR-53	193+08.00	RT	ASPHALT	218.00		24.22	2.18	0.67	
15	DR-54	193+42.00	LT	ASPHALT	298.00		33.11	2.98	0.92	
15	DR-55	194+40.00	RT	ASPHALT	218.00		24.22	2.18	0.67	
TOTALS CARRIED TO GENERAL SUMMARY							1231	111	38	

CALCULATED DRG
CHECKED AMP

SUBSUMMARIES

SUM-W. STEELS CORNERS RD.
RESURFACING (PID 102904)

Z:\Akron-USAKR3\DCS\Projects\TRN\60584787_WSteelRes\900_CAD_GIS\910_CAD\05-MODELS\102904\Design\Roadway\Sheets\102904_GG001.dwg 30-Jun-20 10:38 AM

DRAINAGE/WATERWORK SUBSUMMARY

PLAN SHEET NO.	REFERENCE NO.	STATION FROM	STATION TO	SIDE		611 CATCH BASIN ADJUSTED TO GRADE	611 MANHOLE ADJUSTED TO GRADE	638 VALVE BOX ADJUSTED TO GRADE
						EACH	EACH	EACH
		STATE ROAD						
12	W-1	121+79.65		RT				1
12	D-1	121+83.20		LT		1		
12	D-2	121+84.00		RT			1	
12	D-3	121+85.70		RT		1		
12	D-4	122+20.10		LT		1		
12	D-5	122+20.10		RT		1		
12	D-6	123+90.30		LT		1		
12	D-7	123+90.30		RT		1		
12	D-8	130+49.40		LT		1		
12	D-9	130+49.40		RT		1		
12	D-10	131+24.00		LT		1		
12	D-11	131+24.00		RT		1		
14	D-12	170+09.70		RT			1	
14	D-13	171+80.90		RT			1	
15	W-2	184+56.68		LT				1
15	D-14	185+70.30		RT			1	
TOTALS CARRIED TO GENERAL SUMMARY						10	4	2

PAVEMENT MARKING SUBSUMMARY

SHEET NO.	REFERENCE NO.	STATION FROM	STATION TO	SIDE	646 EDGE LINE, 6"	646 LANE LINE, 6"	646 CENTER LINE	646 CHANNELIZING LINE, 12"	646 STOP LINE	646 LANE ARROW
					MILE	MILE	MILE	FT	FT	EACH
12	S	122+00.00		LT					11	
12 - 15	C	122+00.00	195+79.00	CEN			1.40			
12 - 15	L	122+00.00	194+83.00	RT		1.38				
12 - 13	EW	136+70.00	155+00.00	LT/RT	0.69					
14 - 15	EW	160+00.00	195+79.00	LT/RT	1.36					
15	CH	194+83.00	195+79.00	RT				192		
15	AR	194+92.00		RT						1
TOTALS CARRIED TO GENERAL SUMMARY					2.05	1.38	1.40	192	11	1

CALCULATED DRG
CHECKED AMP

SUBSUMMARIES

SUM-W. STEELS CORNERS RD.
RESURFACING (PID 102904)

Z:\Akron-USAKR3\DCS\Projects\TRN\60584787_WSteelRes\900_CAD_GIS\910_CAD\05-MODELS\102904\Design\Roadway\Sheets\102904_GG001.dwg 30-Jun-20 10:38 AM

SAFETY EDGE CALCULATIONS										
STATION		SIDE	LENGTH	THICKNESS OF WEDGE	ANGLE		TANGENT	BASE OF WEDGE	CROSS-SECTIONAL AREA OF WEDGE	WEDGE VOLUME 441 SURFACE
TO	FROM		FEET	FEET	DEGREE	RADIANS		FEET	SQ FT	CU YD
136+75.00	155+05.00	LT/RT	1830.00	0.2083	30	0.5236	0.5774	0.3608	0.0376	5.10
160+05.00	195+79.00	LT/RT	3574.00	0.2083	30	0.5236	0.5774	0.3608	0.0376	9.95
TOTALS CARRIED TO GENERAL SUMMARY										15

CALCULATED DRG
CHECKED AMP

CALCULATIONS

SUM-W. STEELS CORNERS RD.
RESURFACING (PID 102904)

Z:\Akron-USAKR3\DCS\Projects\TRN\60584787_WSteelRes\900_CAD_GIS\910_CAD\05-MODELS\102904\Design\Roadway\Sheets\102904_GG001.dwg 30-Jun-20 10:38 AM

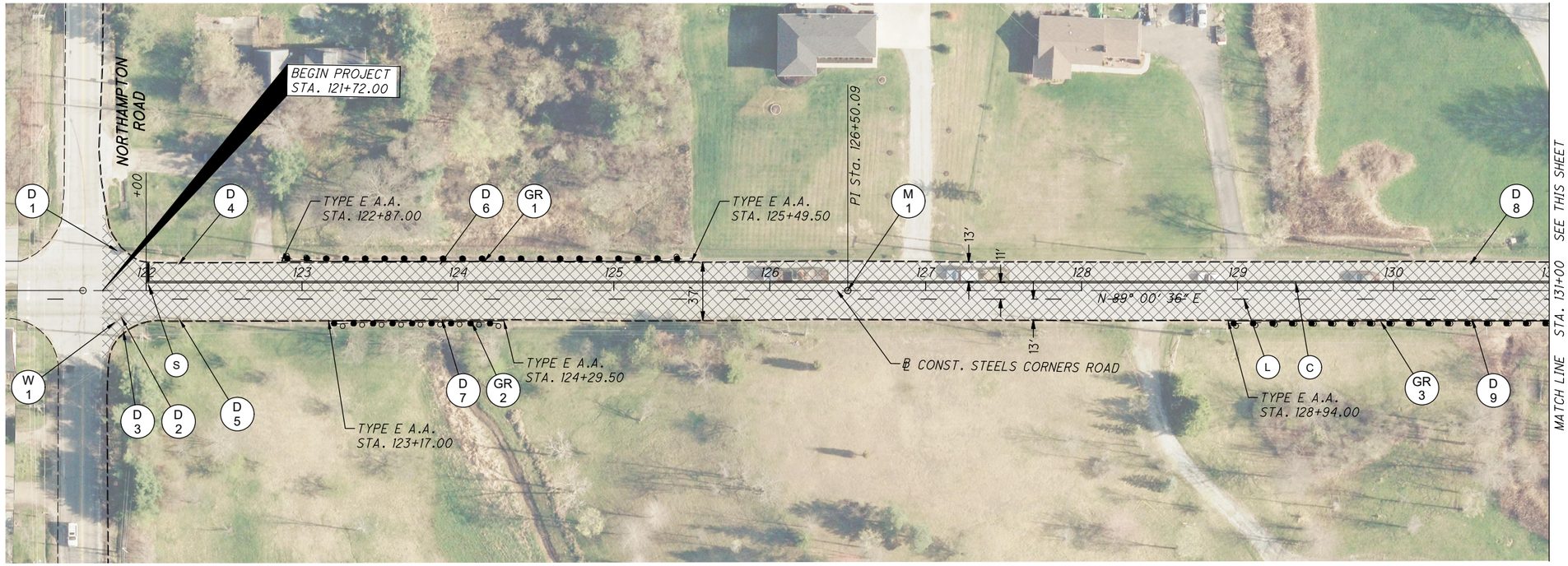

NOTES

FOR GENERAL SUMMARY AND CALCULATIONS, SEE SHEETS 8 THRU 11.

LEGEND

- CR — CURB RAMP ITEM
- D — DRAINAGE ITEM
- DR — DRIVEWAY ITEM
- G — GUARDRAIL ITEM
- M — MONUMENT ITEM
- W — WATERWORK ITEM
- EW — EDGE LINE, 6" (WHITE)
- C — CENTER LINE, SOLID, DOUBLE
- L — LANE LINE, 6"
- S — STOP LINE
- AR — ARROW ON PAVEMENT
- LIMITS OF PAVEMENT RESURFACING

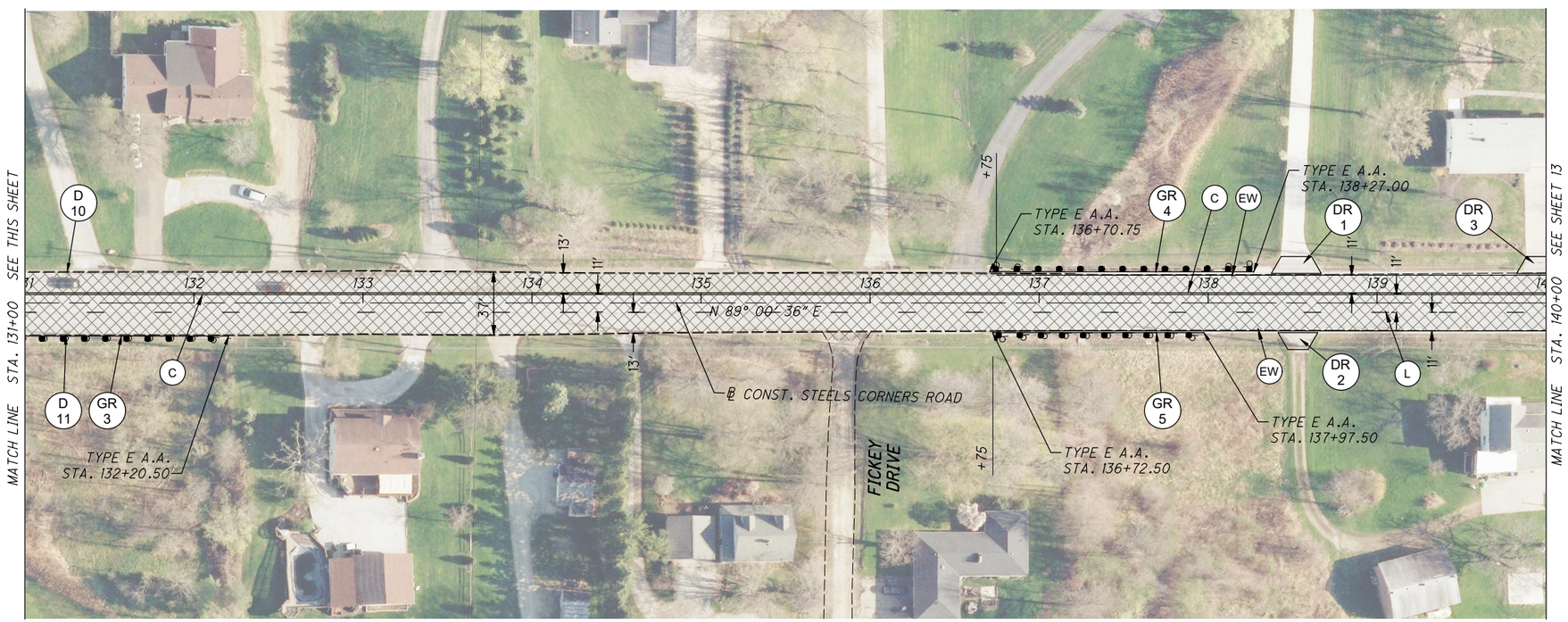

HORIZONTAL SCALE IN FEET 0 20 40 80

CALCULATED DRG
CHECKED AMP

PLAN – W. STEELS CORNERS ROAD
BEGINNING TO STA. 140+00

SUM–W. STEELS CORNERS RD.
RESURFACING (PID 102904)

Z:\Akron–USAKR3\DCS\Projects\TRN\60584787_WSteelRes\900_CAD_GIS\910_CAD\05–MODELS\102904\Design\Roadway\Sheets\102904_GP001.dwg 30–Jun–20 10:38 AM

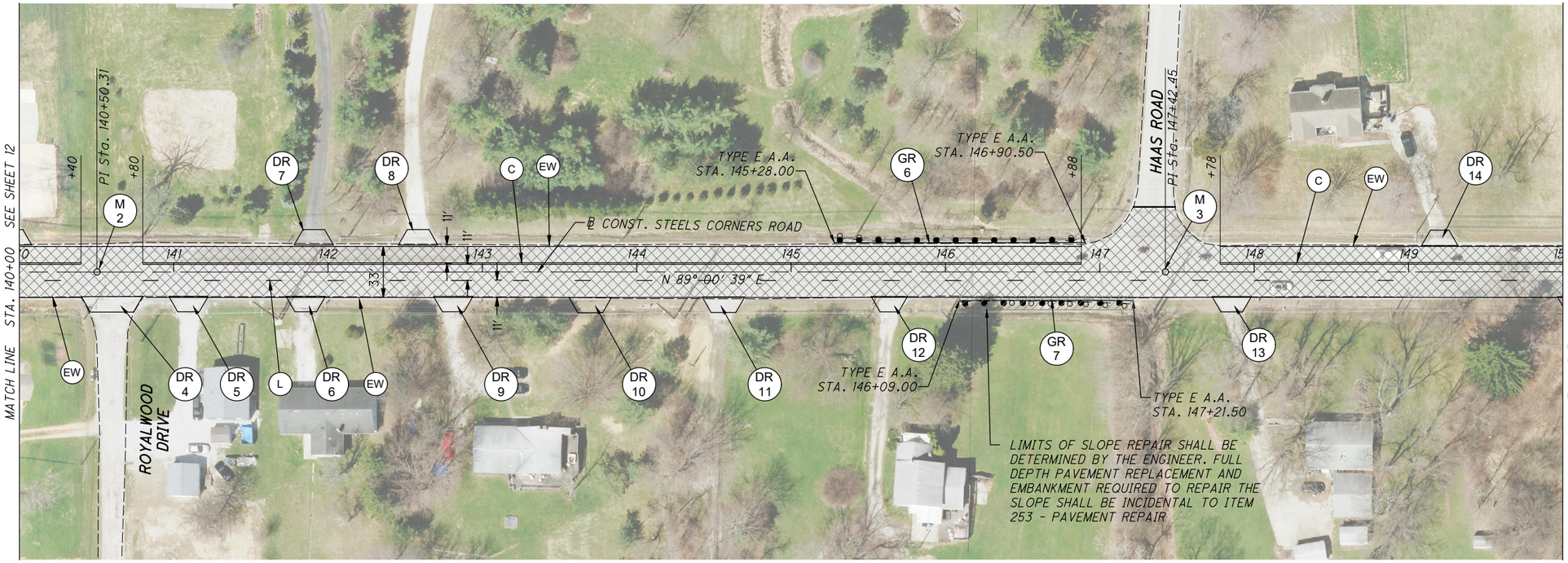

NOTES

FOR GENERAL SUMMARY AND CALCULATIONS, SEE SHEETS 8 THRU 11.

LEGEND

- CR — CURB RAMP ITEM
- D — DRAINAGE ITEM
- DR — DRIVEWAY ITEM
- G — GUARDRAIL ITEM
- M — MONUMENT ITEM
- W — WATERWORK ITEM
- EW — EDGE LINE, 6" (WHITE)
- C — CENTER LINE, SOLID, DOUBLE
- L — LANE LINE, 6"
- S — STOP LINE
- AR — ARROW ON PAVEMENT
- LIMITS OF PAVEMENT RESURFACING

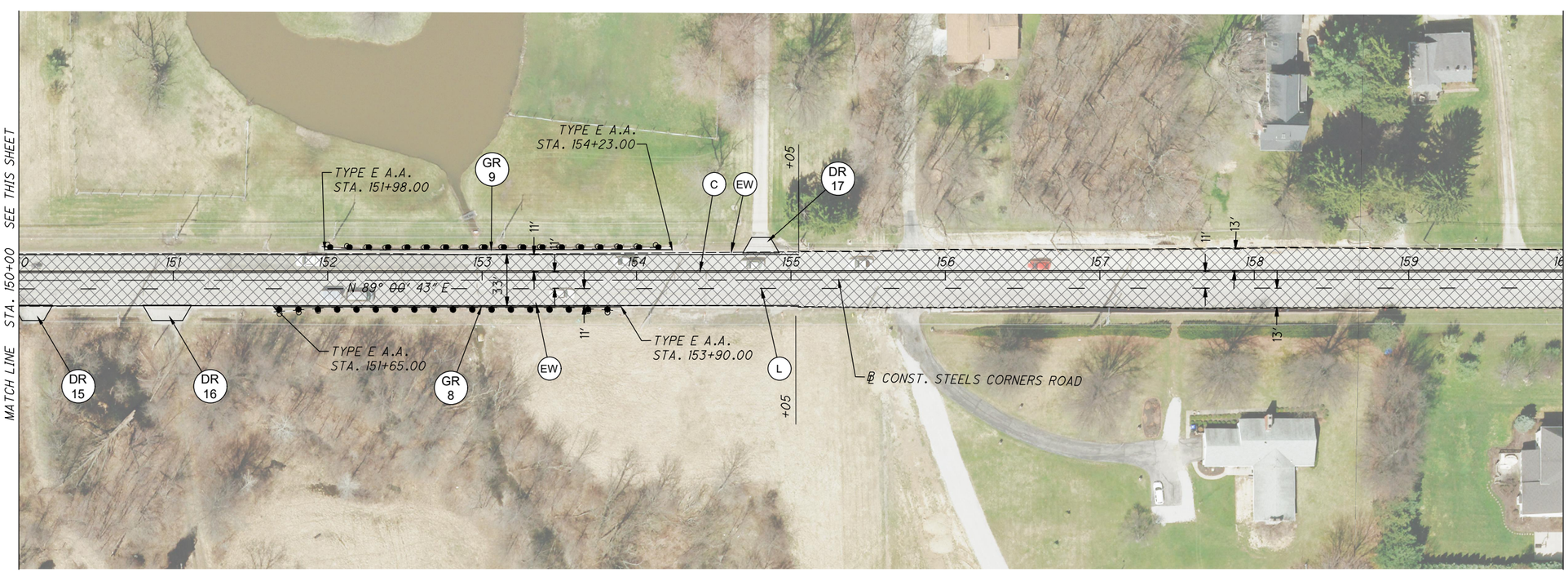

HORIZONTAL SCALE IN FEET 0 20 40 80

CALCULATED DRG
CHECKED AMP

PLAN – W. STEELS CORNERS ROAD
STA. 140+00 TO STA. 160+00

SUM-W. STEELS CORNERS RD.
RESURFACING (PID 102904)

Z:\Akron-USAKR3\DCS\Projects\TRN\60584787_WSteelRes\900_CAD_GIS\910_CAD\05-MODELS\102904\Design\Roadway\Sheets\102904_GP001.dwg 30-Jun-20 10:39 AM

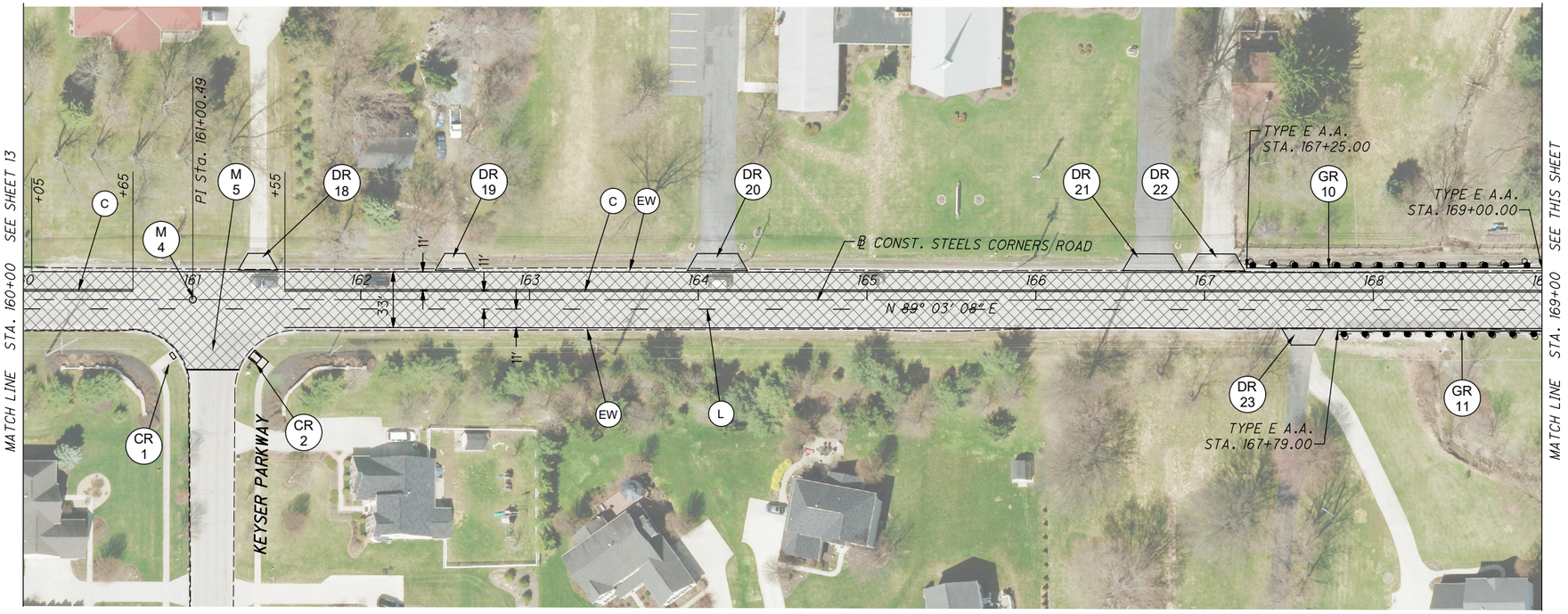

NOTES

FOR GENERAL SUMMARY AND CALCULATIONS, SEE SHEETS 8 THRU 11.

LEGEND

- (CR) CURB RAMP ITEM
- (D) DRAINAGE ITEM
- (DR) DRIVEWAY ITEM
- (G) GUARDRAIL ITEM
- (M) MONUMENT ITEM
- (W) WATERWORK ITEM
- (EW) EDGE LINE, 6" (WHITE)
- (C) CENTER LINE, SOLID, DOUBLE
- (L) LANE LINE, 6"
- (S) STOP LINE
- (AR) ARROW ON PAVEMENT
- LIMITS OF PAVEMENT RESURFACING

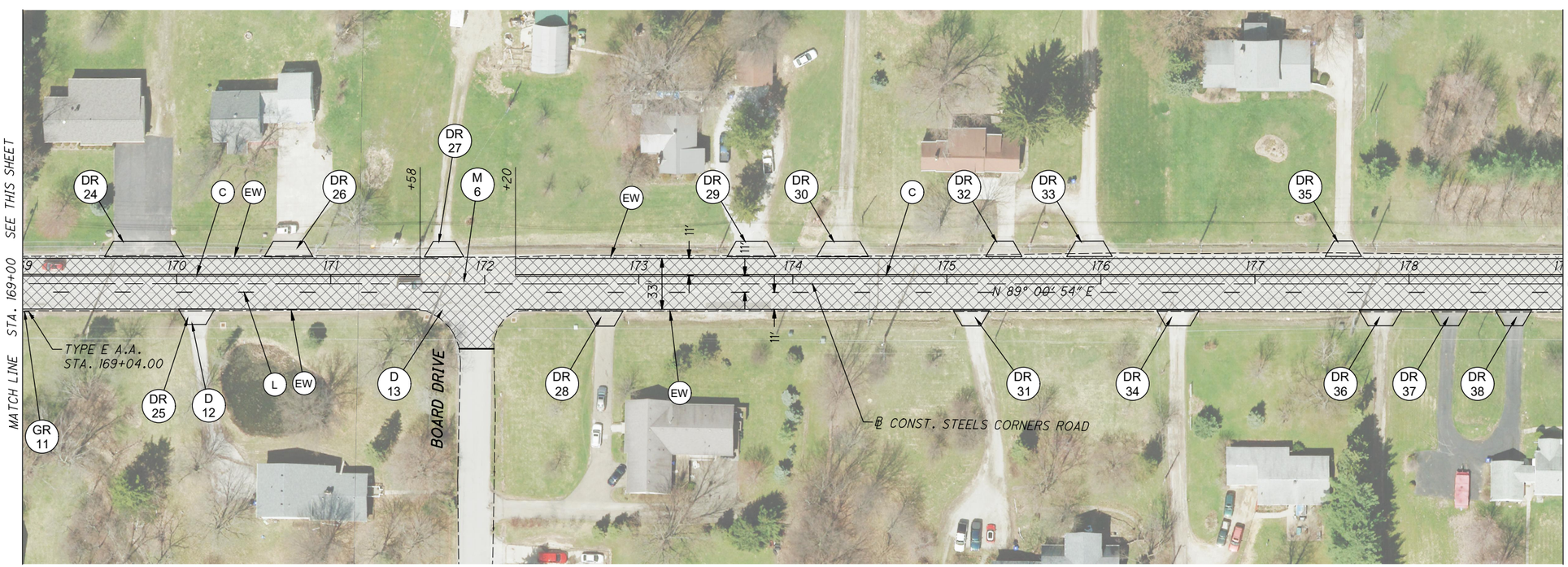

HORIZONTAL SCALE IN FEET 0 20 40 80

CALCULATED DRG
CHECKED AMP

PLAN – W. STEELS CORNERS ROAD
STA. 160+00 TO STA. 179+00

SUM–W. STEELS CORNERS RD.
RESURFACING (PID 102904)

Z:\Akron–USAKR3\DCS\Projects\TRN\60584787_WSteelRes\900_CAD_GIS\910_CAD\05–MODELS\102904\Design\Roadway\Sheets\102904_GP001.dwg 30–Jun–20 10:39 AM

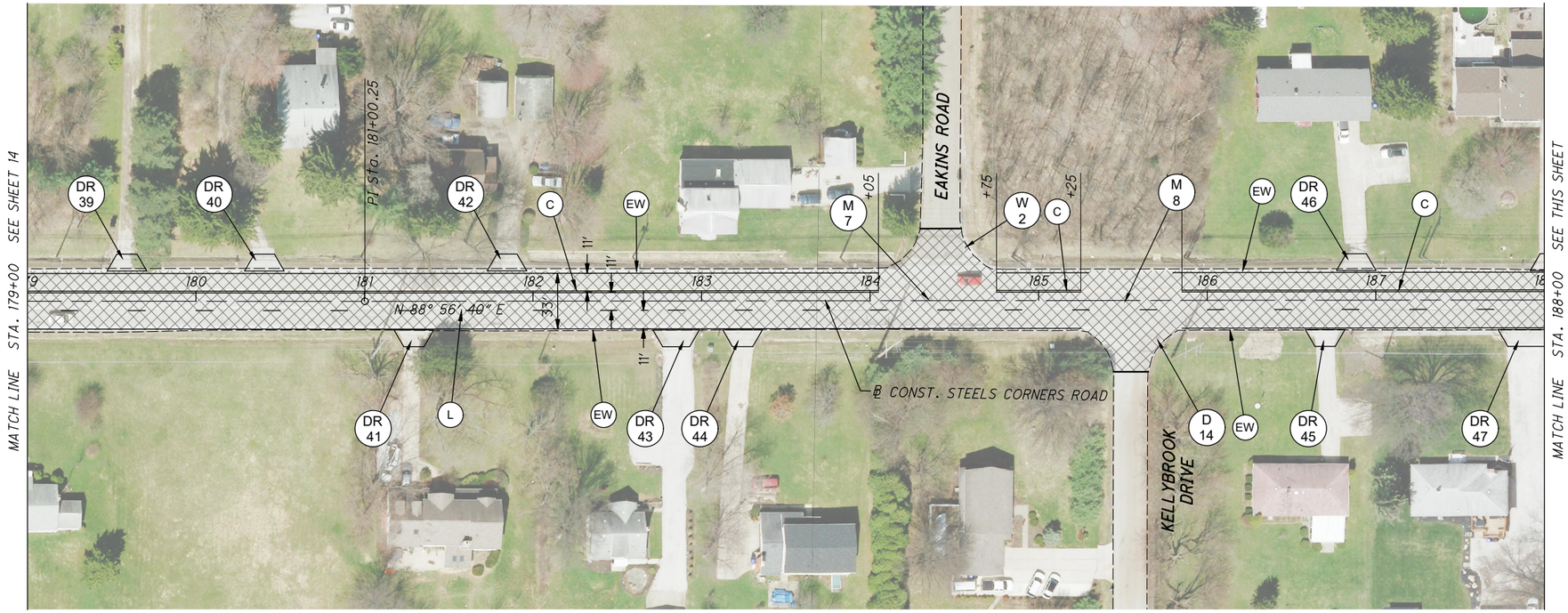

NOTES

FOR GENERAL SUMMARY AND CALCULATIONS, SEE SHEETS 8 THRU 11.

LEGEND

- CR — CURB RAMP ITEM
- D — DRAINAGE ITEM
- DR — DRIVEWAY ITEM
- G — GUARDRAIL ITEM
- M — MONUMENT ITEM
- W — WATERWORK ITEM
- EW — EDGE LINE, 6" (WHITE)
- C — CENTER LINE, SOLID, DOUBLE
- L — LANE LINE, 6"
- S — STOP LINE
- AR — ARROW ON PAVEMENT
- LIMITS OF PAVEMENT RESURFACING

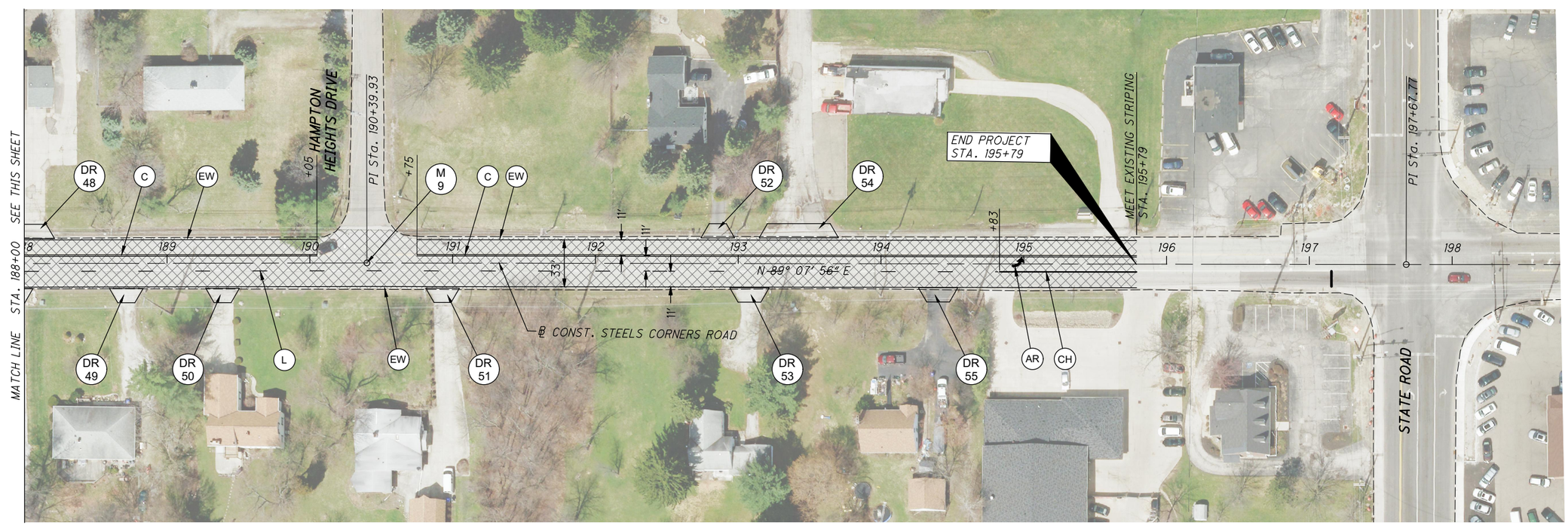

HORIZONTAL SCALE IN FEET 0 100 200 400

CALCULATED DRG
CHECKED AMP

PLAN – W. STEELS CORNERS ROAD
STA. 179+00 TO ENDING

SUM–W. STEELS CORNERS RD.
RESURFACING (PID 102904)

Z:\Akron–USAKR3\DCS\Projects\TRN\60584787_WSteelRes\900_CAD_GIS\910_CAD\05–MODELS\102904\Design\Roadway\Sheets\102904_GP001.dwg 30–Jun–20 10:39 AM